REV	DESCRIPTION	DRAWN	DATE
		APPROVED	DATE

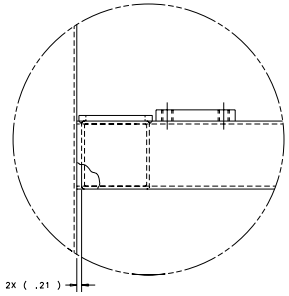

VIEW A
SCALE 1:2

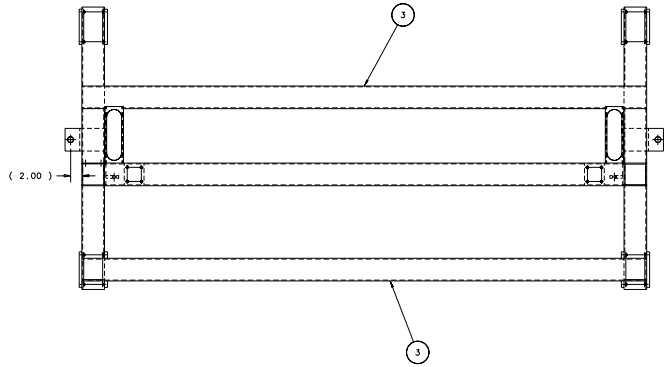

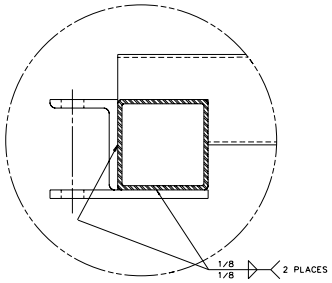

SECTION B-B
SCALE : 1:2

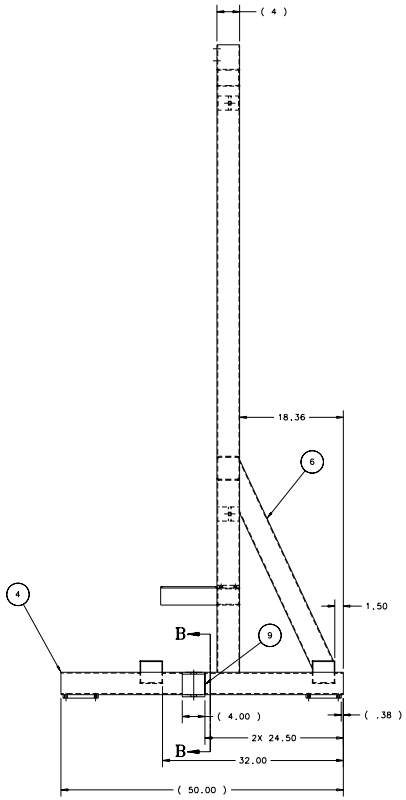

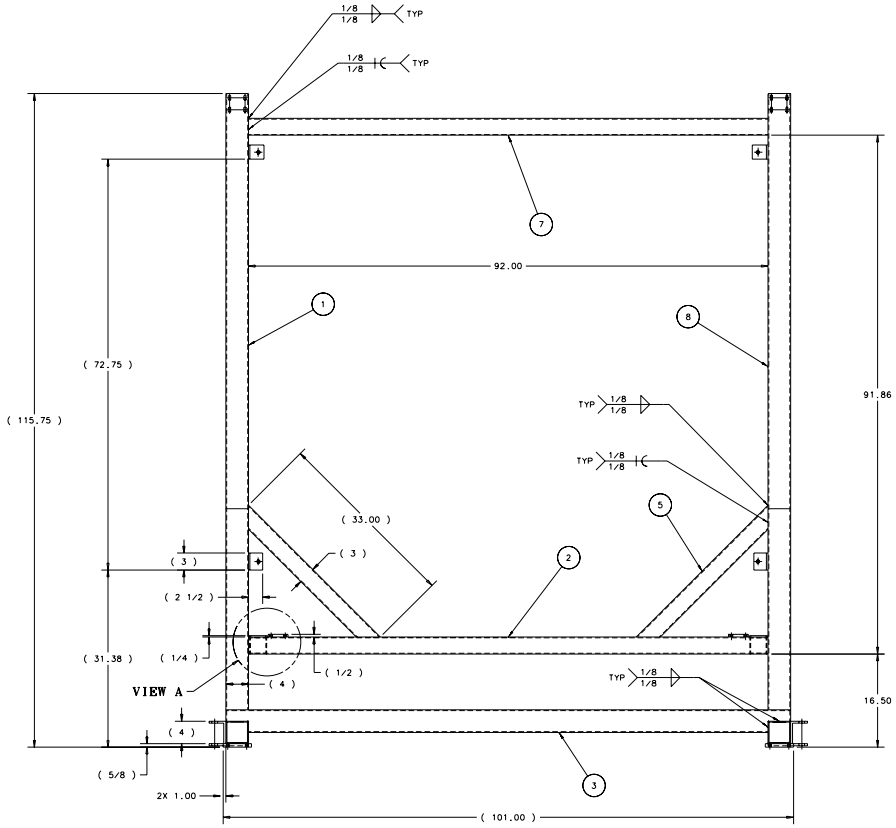

ITEM	PART NO.	DESCRIPTION OR SIZE	QTY.
9	MB-421112	UPPER LOCATING BRACKET	2
8	MD-421084	VERTICAL TUBE L.H.	1
7	COML	REC. STRUCTURAL STEEL TUBING 4 X 3 X 1/8 WALL X 92.00" LG.	1
6	MC-421048	GUSSET TUBE-65°	2
5	MC-421047	GUSSET TUBE-45°	2
4	MC-421051	LOWER HORIZONTAL TUBE-(SHORT)	2
3	MD-421046	LOWER HORIZONTAL TUBE-(LONG)	2
2	MD-421045	UPPER HORIZ TUBE	1
1	MD-421044	VERTICAL TUBE R.H.	1

PARTS LIST

UNLESS OTHERWISE SPECIFIED			ORIGINATOR	E.LAVALLIE	13-AUG-2002
.XX	.XXX	ANGLES	DRAWN	G.SMITH	13-AUG-2002
± .03	± ---	± ---	CHECKED		
1. BREAK ALL SHARP EDGES 2. DO NOT SCALE DRAWING. 3. DIMENSIONS BASED UPON ANSI Y14.5M-1982. 4. ALL DIMENSIONS ARE INCHES 5. MAX. ALL MACH. SURFACES			APPROVED		
			USED ON	ME-421079	
			MATERIAL	SEE PARTS LIST ABOVE	

FERMI NATIONAL ACCELERATOR LABORATORY
UNITED STATES DEPARTMENT OF ENERGY

PPD/MECHANICAL DEPT.
E 907 IOWA DRIFT CHAMBER
MOVEABLE SUPPORT STAND WELDMENT

SCALE	DRAWING NUMBER	SHEET	REV
1:8 & NOTED	3907.512-ME-421042	1 OF 1	

CREATED WITH : Ideas8m4 GROUP: PPD/MECHANICAL DEPARTMENT