REV	DESCRIPTION	DRAWN	DATE
		APPROVED	DATE

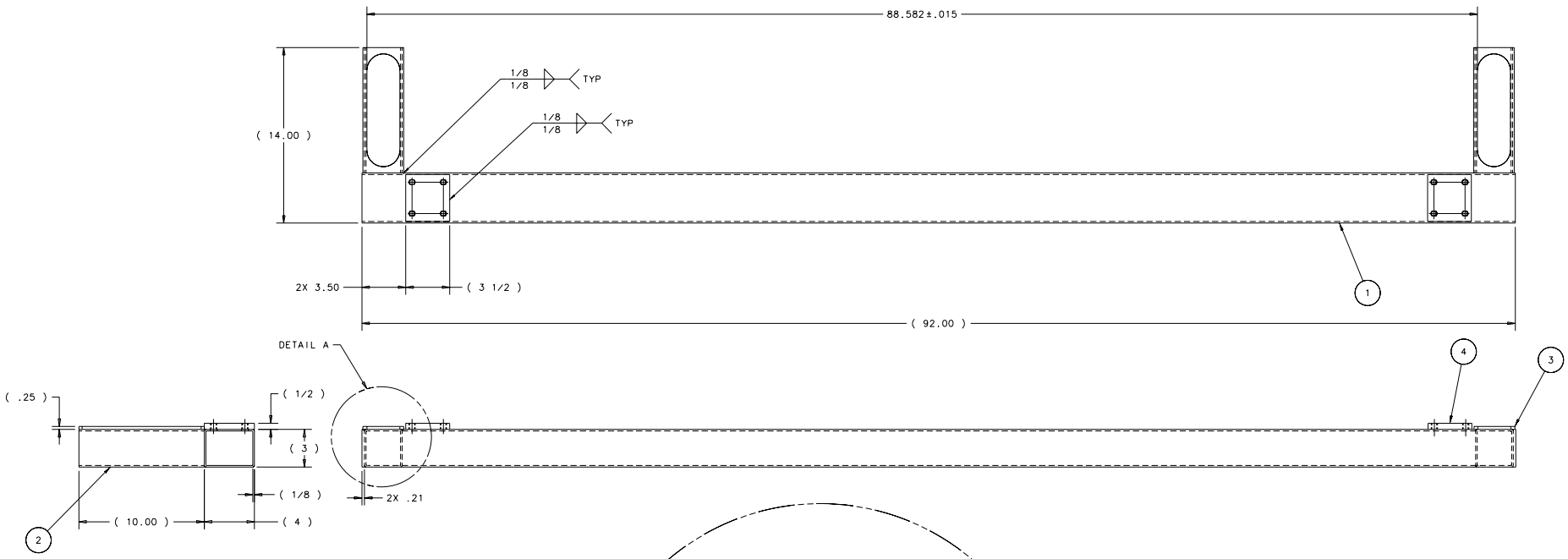

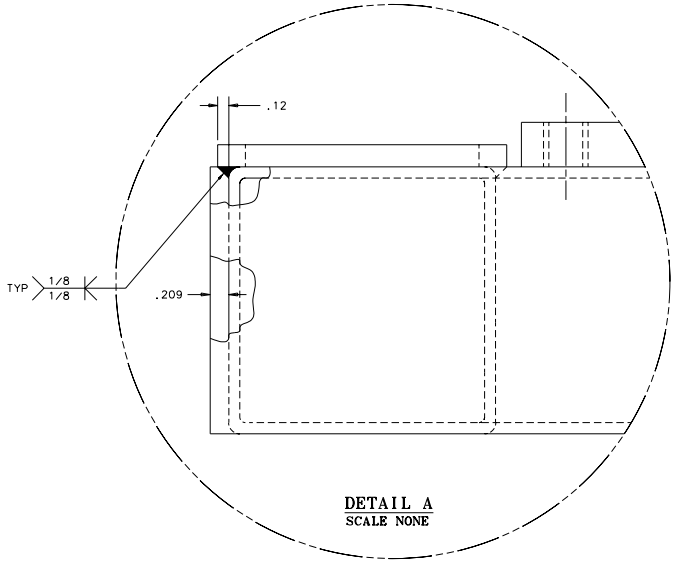

DETAIL A
SCALE NONE

ITEM	PART NO.	DESCRIPTION OR SIZE	QTY.
4	MB-421066	TAPPING PLATE	2
3	MB-421067	GUIDE PLATE	2
2	COML	REC STRUCTURAL STEEL TUBING 4 X 3 X 1/8 WALL X 10.00" LG.	2
1	COML	REC STRUCTURAL STEEL TUBING 4 X 3 X 1/8 WALL X 92.00" LG.	1

PARTS LIST

UNLESS OTHERWISE SPECIFIED			ORIGINATOR	E.LAVALLIE	15-AUG-2002
.XX	.XXX	ANGLES	DRAWN	G.SMITH	15-AUG-2002
± .03	± ---	± ---	CHECKED		
			APPROVED		

1. BREAK ALL SHARP EDGES .015 MAX.
2. DO NOT SCALE DRAWING.
3. DIMENSIONS BASED UPON ANSI Y14.5M-1982
4. ALL DIMENSIONS ARE INCHES
5. MAX. ALL MACH. SURFACES 125

USED ON: ME-421042, ME-421081

MATERIAL: SEE PARTS LIST ABOVE

FERMI NATIONAL ACCELERATOR LABORATORY
UNITED STATES DEPARTMENT OF ENERGY

PPD/MECHANICAL DEPT.
E 907 IOWA DRIFT CHAMBER
UPPER HORIZ TUBE SUPPORT STAND

SCALE	DRAWING NUMBER	SHEET	REV
1:4	3907.512-MD-421045	1 OF 1	

CREATED WITH : Ideas8m4 GROUP: PPD/MECHANICAL DEPARTMENT