REV	DESCRIPTION	DRAWN	DATE
		APPROVED	DATE

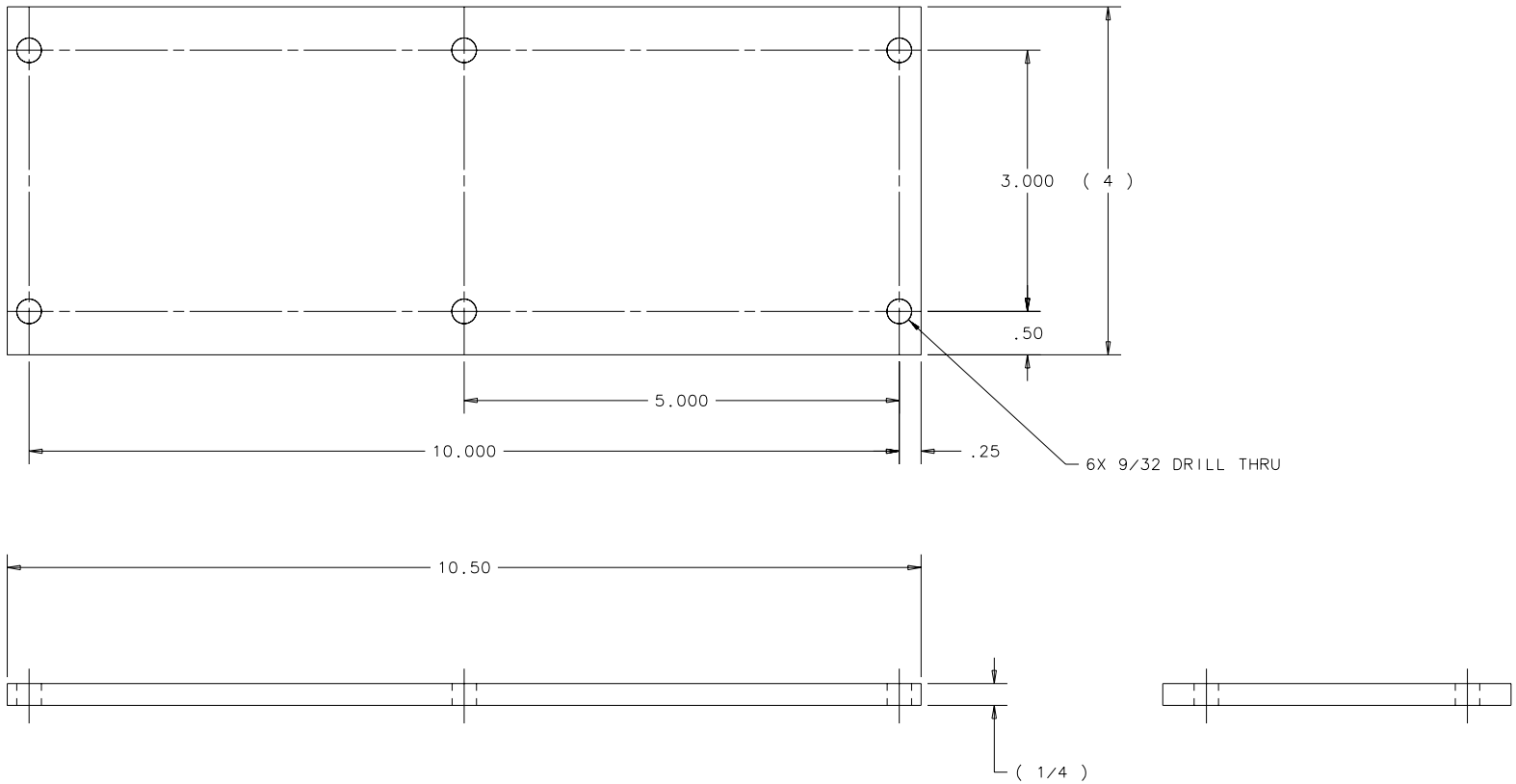

ITEM	PART NO.	DESCRIPTION OR SIZE	QTY.
PARTS LIST			

UNLESS OTHERWISE SPECIFIED			ORIGINATOR	E.LAVALLIE	15-AUG-2002
.XX	.XXX	ANGLES	DRAWN	G.SMITH	15-AUG-2002
± .03	± .015	± ---	CHECKED		
			APPROVED		

1. BREAK ALL SHARP EDGES .015 MAX.
2. DO NOT SCALE DRAWING.
3. DIMENSIONS BASED UPON ANSI Y14.5M-1982
4. ALL DIMENSIONS ARE INCHES
5. MAX. ALL MACH. SURFACES 125

USED ON: ME-421079 ; ME-421082

MATERIAL: H.R. STEEL FLAT 1/4 X 4

FERMI NATIONAL ACCELERATOR LABORATORY
UNITED STATES DEPARTMENT OF ENERGY

PPD/MECHANICAL DEPT.
E 907 IOWA DRIFT CHAMBER
UPPER BRK CLAMP PLATE -SPRT STND

SCALE	DRAWING NUMBER	SHEET	REV
1:1	3907.512-MC-421076	1 OF 1	

CREATED WITH : Ideas8m4 | GROUP: PPD/MECHANICAL DEPARTMENT