REV	DESCRIPTION	DRAWN	DATE
		APPROVED	DATE

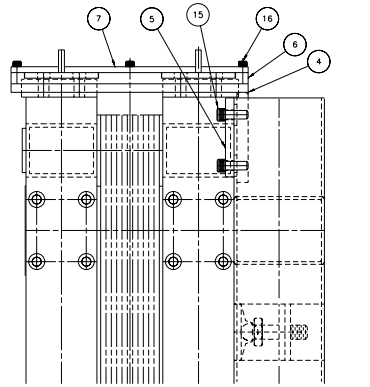

VIEW B
SCALE:1:2

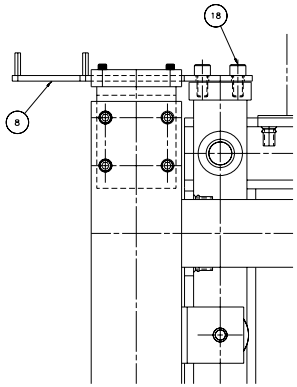

VIEW A
SCALE:1:2

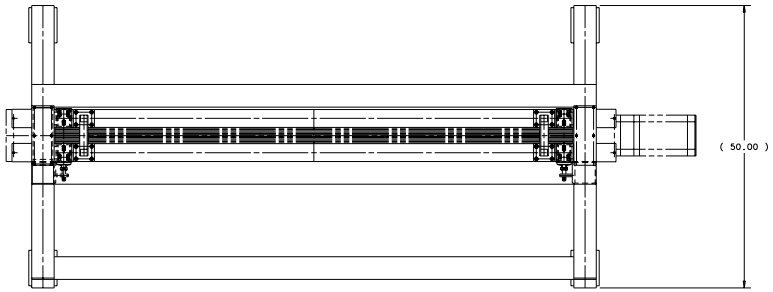

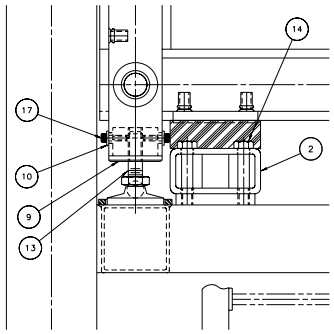

VIEW C
SCALE:1:2

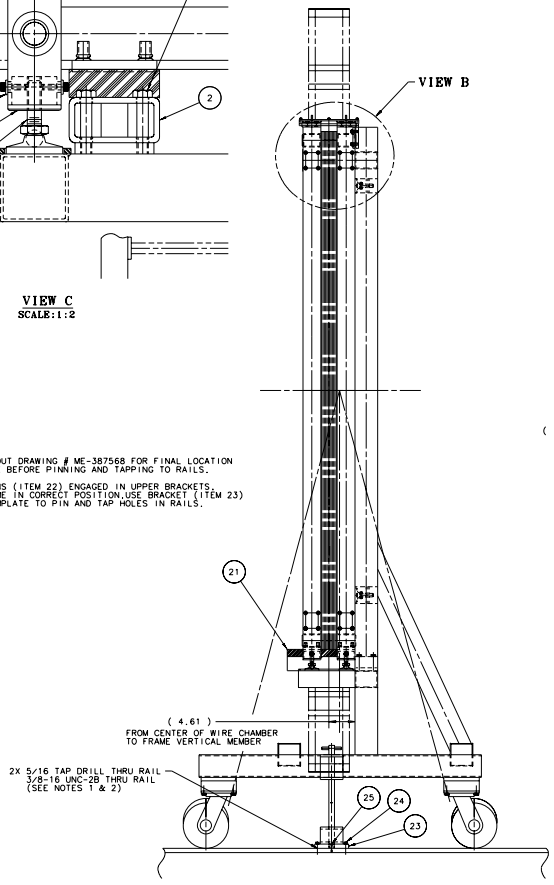

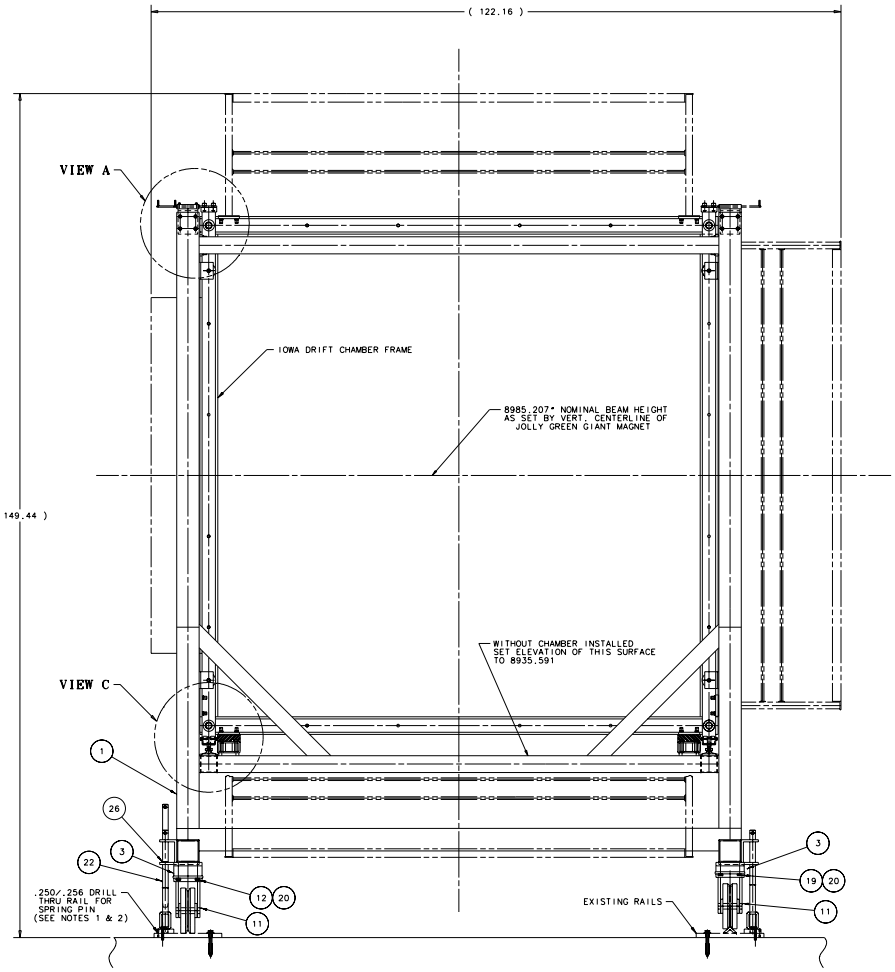

NOTES :

1. SEE LAYOUT DRAWING # ME-387568 FOR FINAL LOCATION OF FRAME BEFORE PINNING AND TAPPING TO RAILS.
2. WITH PINS (ITEM 22) ENGAGED IN UPPER BRACKETS, AND FRAME IN CORRECT POSITION,USE BRACKET (ITEM 23) AS A TEMPLATE TO PIN AND TAP HOLES IN RAILS.

ITEM	PART NO.	DESCRIPTION OR SIZE	QTY.
26	COML	HAIRPIN COTTER PIN-McMASTER CARR # 98335A085 - ZINC PLATED STEEL WIRE Ø.148 X 3 5/16" LG.	2
25	COML	Ø1/4 SPRING PIN X 1.50" LG. 18-8 STAINLESS STEEL	2
24	COML	3/8-16 UNC-2A X 1 1/2" LG. SOCKET HD. SCREW - STEEL	4
23	MB-421113	LOCATING BRACKET	2
22	MB-421115	LOCATING PIN	2
21	COML	WOOD - 2 X 4 X 12.00 LG.	2
20	COML	FLAT WASHER - STEEL 1/2 SCREW SIZE	16
19	COML	1/2-13 UNC-2A X 2" LG. HEX HD. SCREW - STEEL	8
18	COML	METRIC -SOCKET HD. SCREW M12 X 25 mm LG.	12
17	COML	1/4-20 UNC-2A X 7/8 LG. SOCKET HD. SCREW - STEEL	4
16	COML	1/4-20 UNC-2A X 1" LG. SOCKET HD. SCREW - STEEL	12
15	COML	3/8-16 UNC-2A X 1" LG. SOCKET HD. SCREW - STEEL	8
14	COML	1/2-13 UNC-2A X 2 1/2 LG. HEX HD. SCREW - STEEL	8
13	COML	GRAINGER LEVELING MOUNTS MODEL #2G367 5/8-11 THREAD X 2 1/2 DIA.	8
12	COML	1/2-13 UNC-2A X 2 3/4 LG. HEX HD. SCREW - STEEL	8
11	COML	ALBION V-GROOVE CASTER SWIVEL MOUNT TYPE 40 x 8" CAST IRON WHEEL McMASTER #30247 (HEIGHT TO 1/8")	4
10	MB-421080	BUSHING	8
9	MB-421078	LEVELING NUT	4
8	MC-421077	UPPER SLIDE PLATE	2
7	MC-421076	UPPER BRACKET CLAMP PLATE	2
6	MC-421073	UPPER HOUSING BLOCK	2
5	MB-421072	UPPER CLAMP PLATE	2
4	MB-421071	UPPER HOLD BRACKET WELDMENT	2
3	MB-421070	CASTER SPACER BLOCK	AS REQ'D
2	MB-421069	BLOCKING TUBE	2
1	ME-421042	MOVEABLE SUPPORT STAND WELDMENT	1

PARTS LIST

UNLESS OTHERWISE SPECIFIED			ORIGINATOR	E.LAVALLIE	13-AUG-2002
.XX	.XXX	ANGLES	DRAWN	G.SMITH	13-AUG-2002
± .03	± ---	± ---	CHECKED		
			APPROVED		

1. BREAK ALL SHARP EDGES
2. DO NOT SCALE DRAWING.
3. DIMENSIONS BASED UPON ANSI Y14.5M-1982.
4. ALL DIMENSIONS ARE INCHES
5. MAX. ALL MACH. SURFACES

USED ON: ME-397568

MATERIAL: SEE PARTS LIST ABOVE

FERMI NATIONAL ACCELERATOR LABORATORY
UNITED STATES DEPARTMENT OF ENERGY

PPD/MECHANICAL DEPT.
E 907 IOWA DRIFT CHAMBER
MOVEABLE SUPPORT STAND ASSEMBLY

SCALE	DRAWING NUMBER	SHEET	REV
1:8 & NOTED	3907.512-ME-421079	1 OF 1	

CREATED WITH : Ideas8m4 GROUP: PPD/MECHANICAL DEPARTMENT