REV	DESCRIPTION	DRAWN	DATE
		APPROVED	DATE

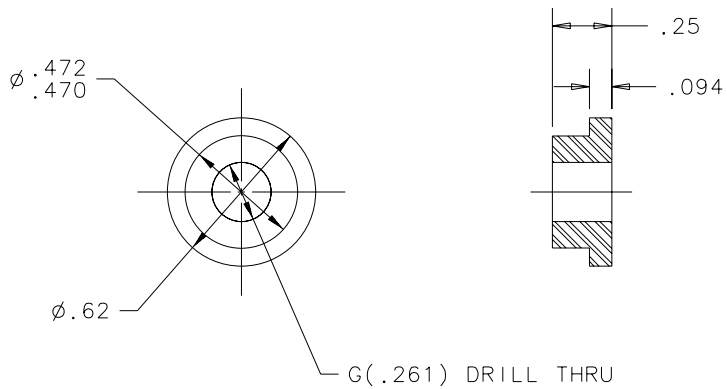

ITEM	PART NO.	DESCRIPTION OR SIZE	QTY.

PARTS LIST

UNLESS OTHERWISE SPECIFIED			ORIGINATOR	E.LAVALLIE	15-AUG-2002
.XX	.XXX	ANGLES	DRAWN	G.SMITH	15-AUG-2002
± .01	± ---	± ---	CHECKED		
			APPROVED		

1. BREAK ALL SHARP EDGES .015 MAX.
2. DO NOT SCALE DRAWING.
3. DIMENSIONS BASED UPON ANSI Y14.5M-1982
4. ALL DIMENSIONS ARE INCHES
5. MAX. ALL MACH. SURFACES 125

USED ON: ME-421079 ; ME-421082

MATERIAL: ASTM-A36 STEEL

FERMI NATIONAL ACCELERATOR LABORATORY
UNITED STATES DEPARTMENT OF ENERGY

PPD/MECHANICAL DEPT.
E 907 IOWA DRIFT CHAMBER
BUSHING-SUPPORT STAND

SCALE	DRAWING NUMBER	SHEET	REV
2:1	3907.512-MB-421080	1 OF 1	

CREATED WITH : Ideas8m4 | GROUP: PPD/MECHANICAL DEPARTMENT