REV	DESCRIPTION	DRAWN	DATE
		APPROVED	DATE

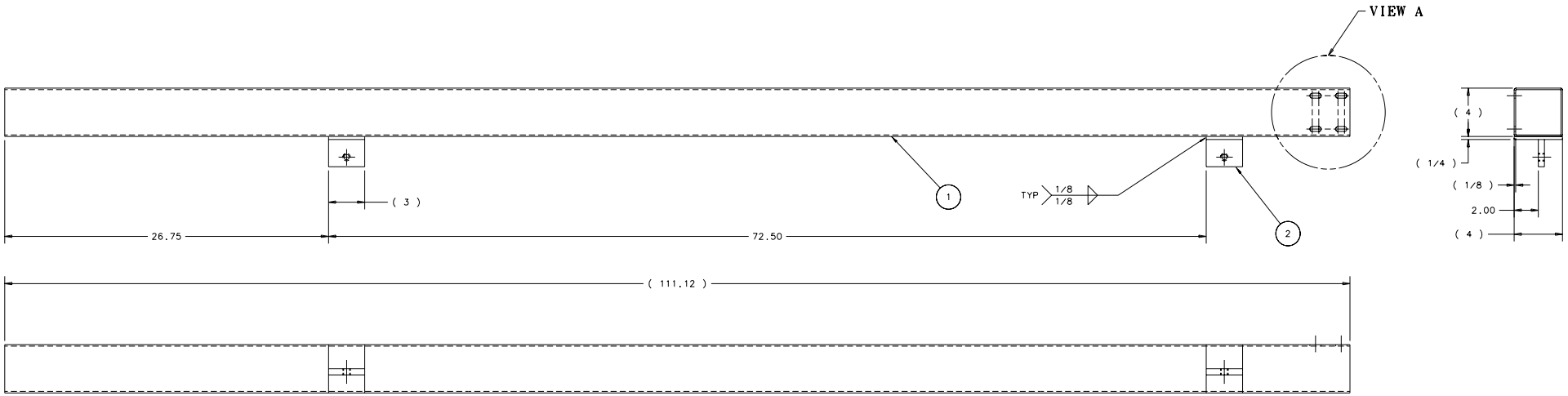

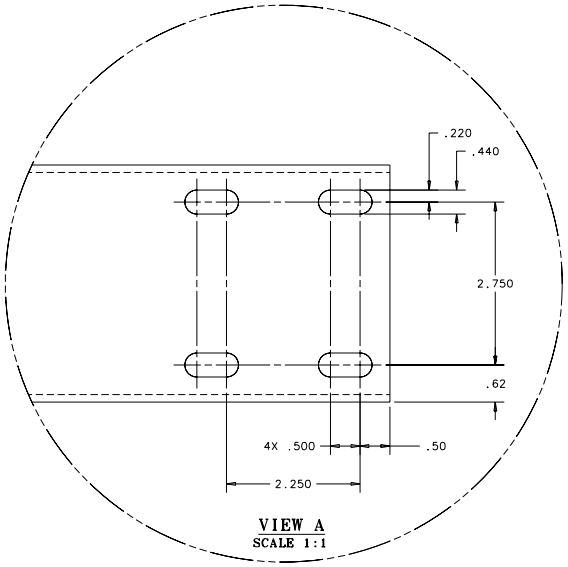

VIEW A
SCALE 1:1

ITEM	PART NO.	DESCRIPTION OR SIZE	QTY.
2	MB-421050	CHAMBER ADJUSTING BRACKET WELDMENT	2
1	COML	REC. STRUCTURAL STEEL TUBING 4 X 4 X 1/8 WALL X 111.12 LG.	1

PARTS LIST

UNLESS OTHERWISE SPECIFIED					
.XX	.XXX	ANGLES	ORIGINATOR	E.LAVALLIE	15-AUG-2002
± .03	± ---	± ---	DRAWN	G.SMITH	15-AUG-2002
			CHECKED		
			APPROVED		

1. BREAK ALL SHARP EDGES .015 MAX.
2. DO NOT SCALE DRAWING.
3. DIMENSIONS BASED UPON ANSI Y14.5M-1982
4. ALL DIMENSIONS ARE INCHES
5. MAX. ALL MACH. SURFACES 125

USED ON: ME-421042

MATERIAL: SEE PARTS LIST ABOVE

FERMI NATIONAL ACCELERATOR LABORATORY
UNITED STATES DEPARTMENT OF ENERGY

PPD/MECHANICAL DEPT.
E 907 IOWA DRIFT CHAMBER
VERTICAL TUBE L.H.-SUPPORT STAND

SCALE	DRAWING NUMBER	SHEET	REV
1:4	3907.512-MD-421084	1 OF 1	

CREATED WITH : Ideas8m4 GROUP: PPD/MECHANICAL DEPARTMENT