REV	DESCRIPTION	DRAWN	DATE
		APPROVED	DATE

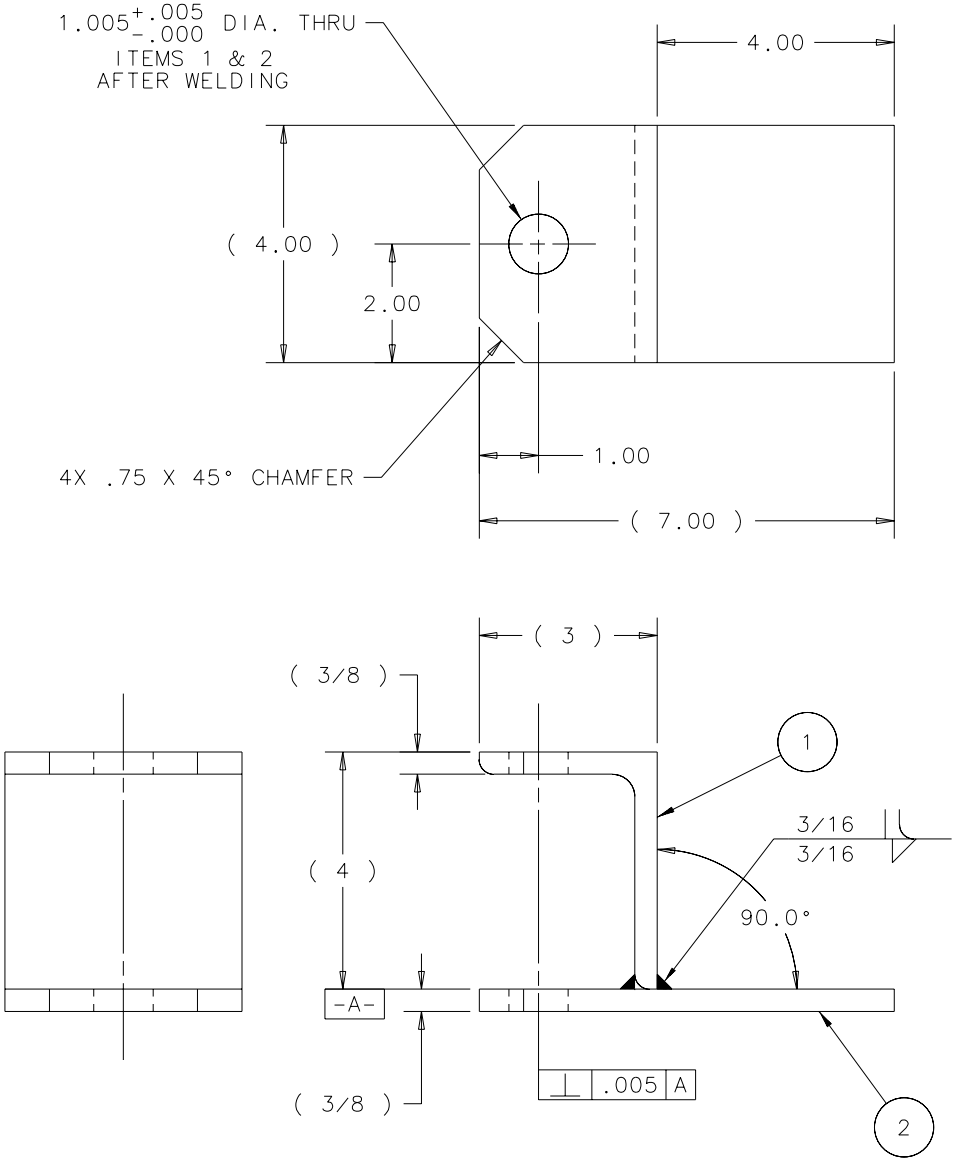

ITEM	PART NO.	DESCRIPTION OR SIZE	QTY.
2	COML	STEEL FLAT -H.R.ASTM A 36 3/8 X 4 X 7.00 LG.	1
1	COML	STEEL ANGLE-ASTM A 36 L4 X 3 X 3/8 X 8.5 LBS/FT.	1

PARTS LIST

UNLESS OTHERWISE SPECIFIED			ORIGINATOR	E.LAVALLIE	20-NOV-2002
.XX	.XXX	ANGLES	DRAWN	G.SMITH	20-NOV-2002
± .03	± .015	± 1/2°	CHECKED		
			APPROVED		

1. BREAK ALL SHARP EDGES .015 MAX.
2. DO NOT SCALE DRAWING.
3. DIMENSIONS BASED UPON ANSI Y14.5M-1982
4. ALL DIMENSIONS ARE INCHES
5. MAX. ALL MACH. SURFACES 125

USED ON: ME-421042

MATERIAL: SEE PARTS LIST ABOVE

FERMI NATIONAL ACCELERATOR LABORATORY
UNITED STATES DEPARTMENT OF ENERGY

PPD/MECHANICAL DEPT.
E 907 IOWA DRIFT CHAMBER
UPPER LOCATING BRK-SUPPORT STAND

SCALE	DRAWING NUMBER	SHEET	REV
1:2	3907.512-MB-421112	1 OF 1	

CREATED WITH : Ideas8m4 | GROUP: PPD/MECHANICAL DEPARTMENT