| REV | DESCRIPTION | DRAWN | DATE |
|---|---|---|---|
| | | APPROVED | DATE |

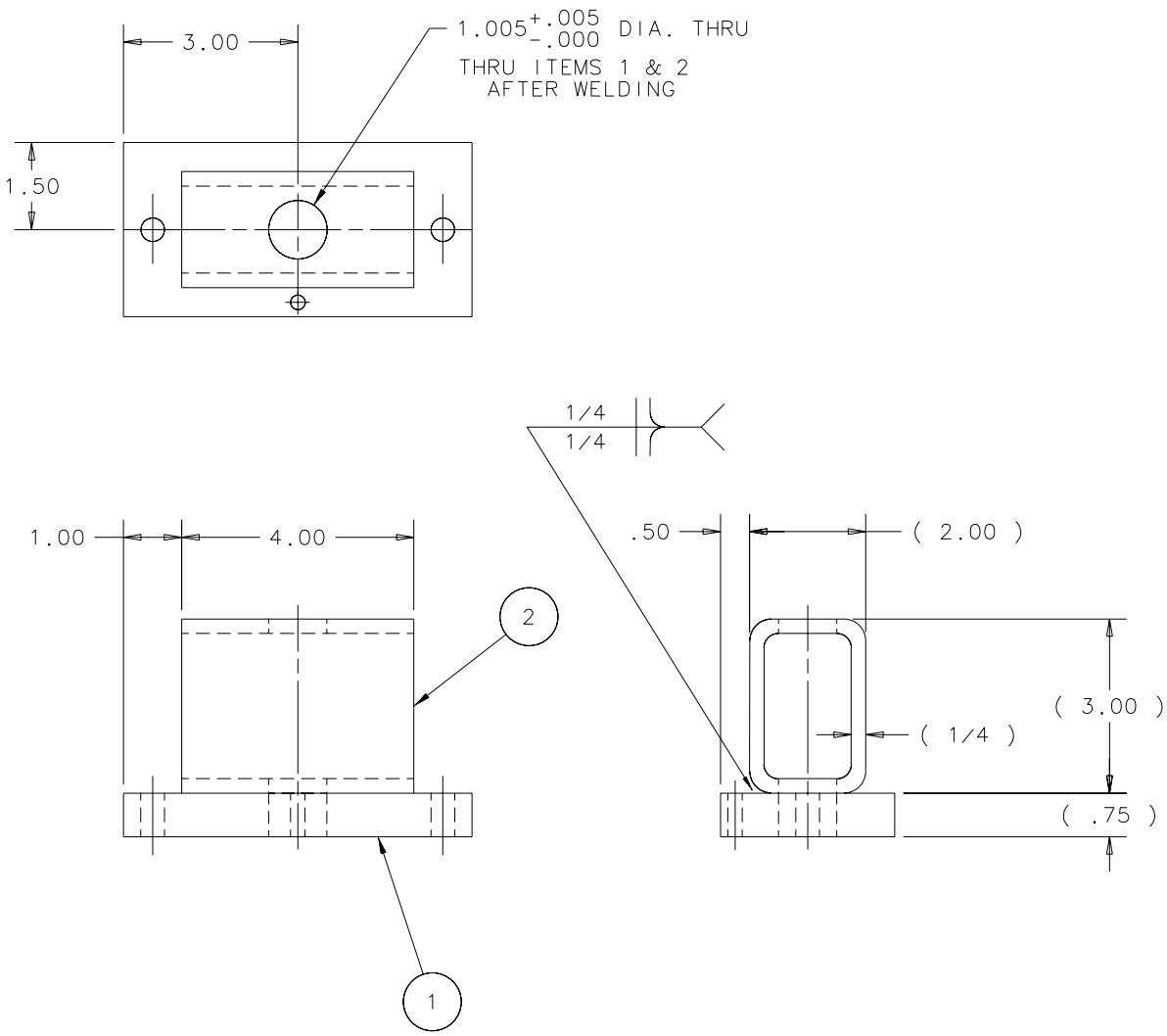


| ITEM | PART NO. | DESCRIPTION OR SIZE | QTY. |
|---|---|---|---|
| 2 | COML | REC. STEEL TUBIN-ASTM A 500 3 X 2 X 1/4 WALL | 1 |
| 1 | MB-421114 | BASE PLATE | 1 |

PARTS LIST

| UNLESS OTHERWISE SPECIFIED | | | ORIGINATOR | E.LAVALLIE | 20-NOV-2002 |
|---|---|---|---|---|---|
| .XX | .XXX | ANGLES | DRAWN | G.SMITH | 20-NOV-2002 |
| ± .03 | ± --- | ± --- | CHECKED | | |
| | | | APPROVED | | |

1. BREAK ALL SHARP EDGES .015 MAX.
2. DO NOT SCALE DRAWING.
3. DIMENSIONS BASED UPON ANSI Y14.5M-1982
4. ALL DIMENSIONS ARE INCHES
5. MAX. ALL MACH. SURFACES 125

USED ON: ME-421079

MATERIAL: SEE PARTS LIST ABOVE

**FERMI NATIONAL ACCELERATOR LABORATORY**
UNITED STATES DEPARTMENT OF ENERGY

PPD/MECHANICAL DEPT.
E 907 IOWA DRIFT CHAMBER
LOCATING BRACKET-SUPPORT STAND

| SCALE | DRAWING NUMBER | SHEET | REV |
|---|---|---|---|
| 1:2 | 3907.512-MB-421113 | 1 OF 1 | |

CREATED WITH : Ideas8m4 | GROUP: PPD/MECHANICAL DEPARTMENT