REV	DESCRIPTION	DRAWN	DATE
		APPROVED	DATE

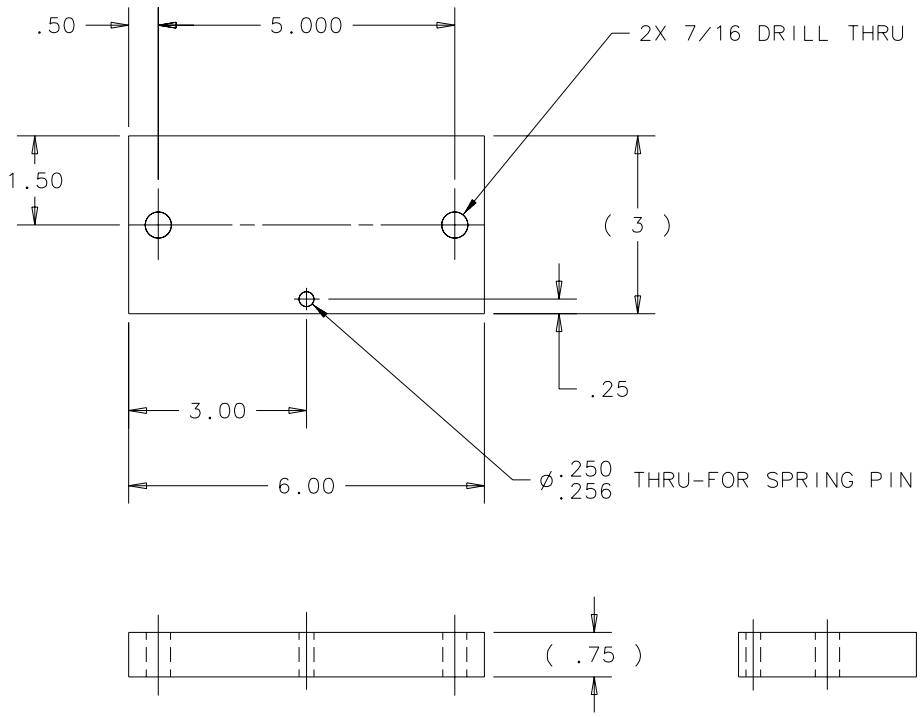

ITEM	PART NO.	DESCRIPTION OR SIZE	QTY.
		PARTS LIST	

UNLESS OTHERWISE SPECIFIED			ORIGINATOR	E.LAVALLIE	21-NOV-2002
.XX	.XXX	ANGLES	DRAWN	G.SMITH	21-NOV-2002
± .03	± .015	± ---	CHECKED		
			APPROVED		

1. BREAK ALL SHARP EDGES .015 MAX.
2. DO NOT SCALE DRAWING.
3. DIMENSIONS BASED UPON ANSI Y14.5M-1982
4. ALL DIMENSIONS ARE INCHES
5. MAX. ALL MACH. SURFACES 125 √

USED ON: MB-421113

MATERIAL: STEEL FLAT-ASTM A 36 3/4 X 3 X 6.00 LG.

FERMI NATIONAL ACCELERATOR LABORATORY
UNITED STATES DEPARTMENT OF ENERGY

PPD/MECHANICAL DEPT.
E 907 IOWA DRIFT CHAMBER
BASE PLATE-LOCATING BRACKET

SCALE	DRAWING NUMBER	SHEET	REV
1:2	3907.512-MB-421114	1 OF 1	

CREATED WITH : Ideas8m4 | GROUP: PPD/MECHANICAL DEPARTMENT