REV	DESCRIPTION	DRAWN	DATE
		APPROVED	DATE

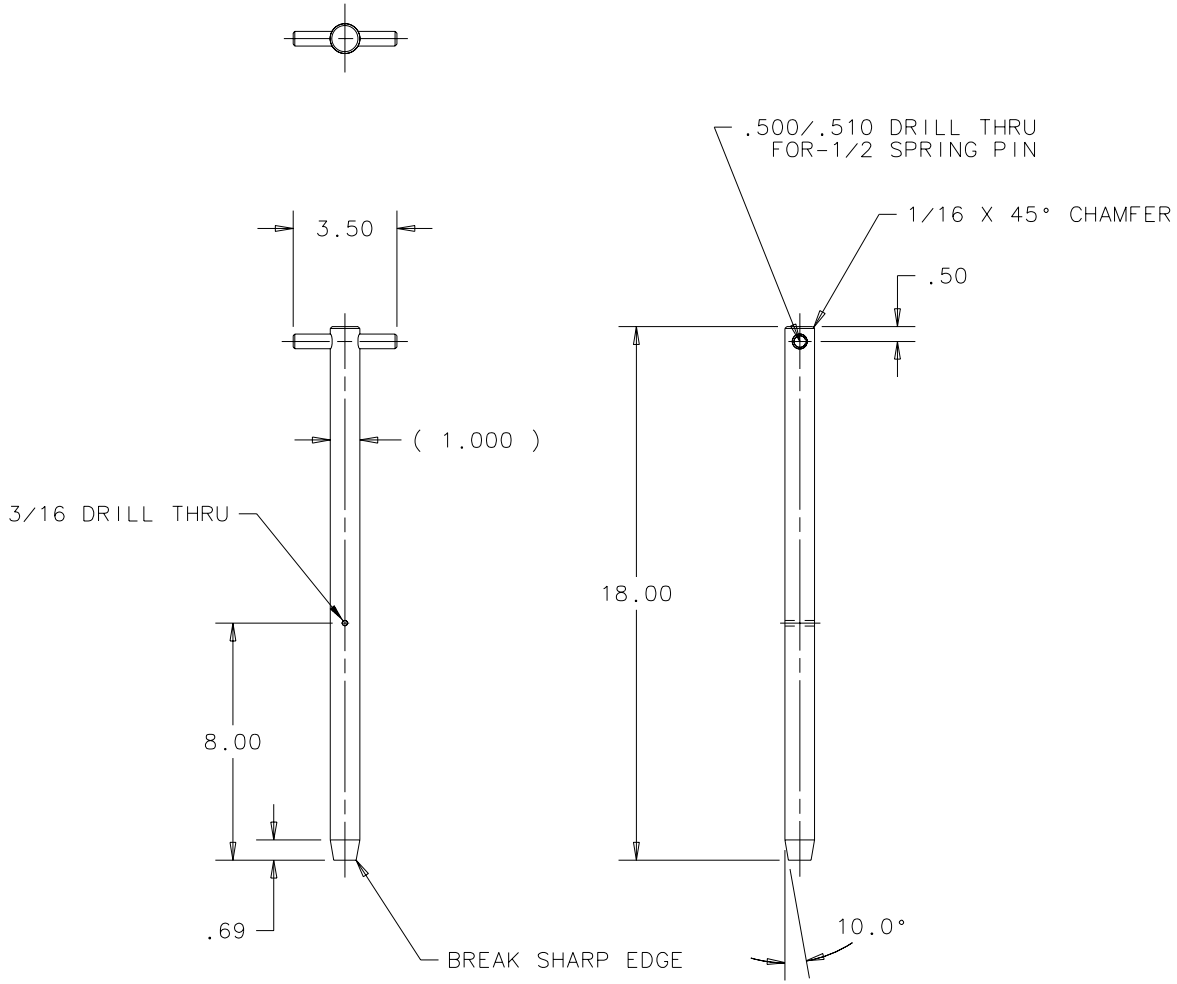

ITEM	PART NO.	DESCRIPTION OR SIZE	QTY.
2	COML	Ø1/2 SPRING PIN X 3 1/2 LG. STEEL	1
1	COML	PRECISION GROUND BAR 4140/4142 DGP - STEEL	1

PARTS LIST

UNLESS OTHERWISE SPECIFIED					
.XX	.XXX	ANGLES	ORIGINATOR	E.LAVALLIE	21-NOV-2002
± .03	± .015	± ---	DRAWN	G.SMITH	21-NOV-2002
			CHECKED		
			APPROVED		

1. BREAK ALL SHARP EDGES .015 MAX.
2. DO NOT SCALE DRAWING.
3. DIMENSIONS BASED UPON ANSI Y14.5M-1982
4. ALL DIMENSIONS ARE INCHES
5. MAX. ALL MACH. SURFACES 125

USED ON: ME-421079

MATERIAL: SEE PARTS LIST ABOVE

FERMI NATIONAL ACCELERATOR LABORATORY
UNITED STATES DEPARTMENT OF ENERGY

PPD/MECHANICAL DEPT.
E 907 IOWA DRIFT CHAMBER
LOCATING PIN-SUPPORT STAND

SCALE	DRAWING NUMBER	SHEET	REV
1:2	3907.512-MB-421115	1 OF 1	

CREATED WITH : Ideas8m4 | GROUP: PPD/MECHANICAL DEPARTMENT