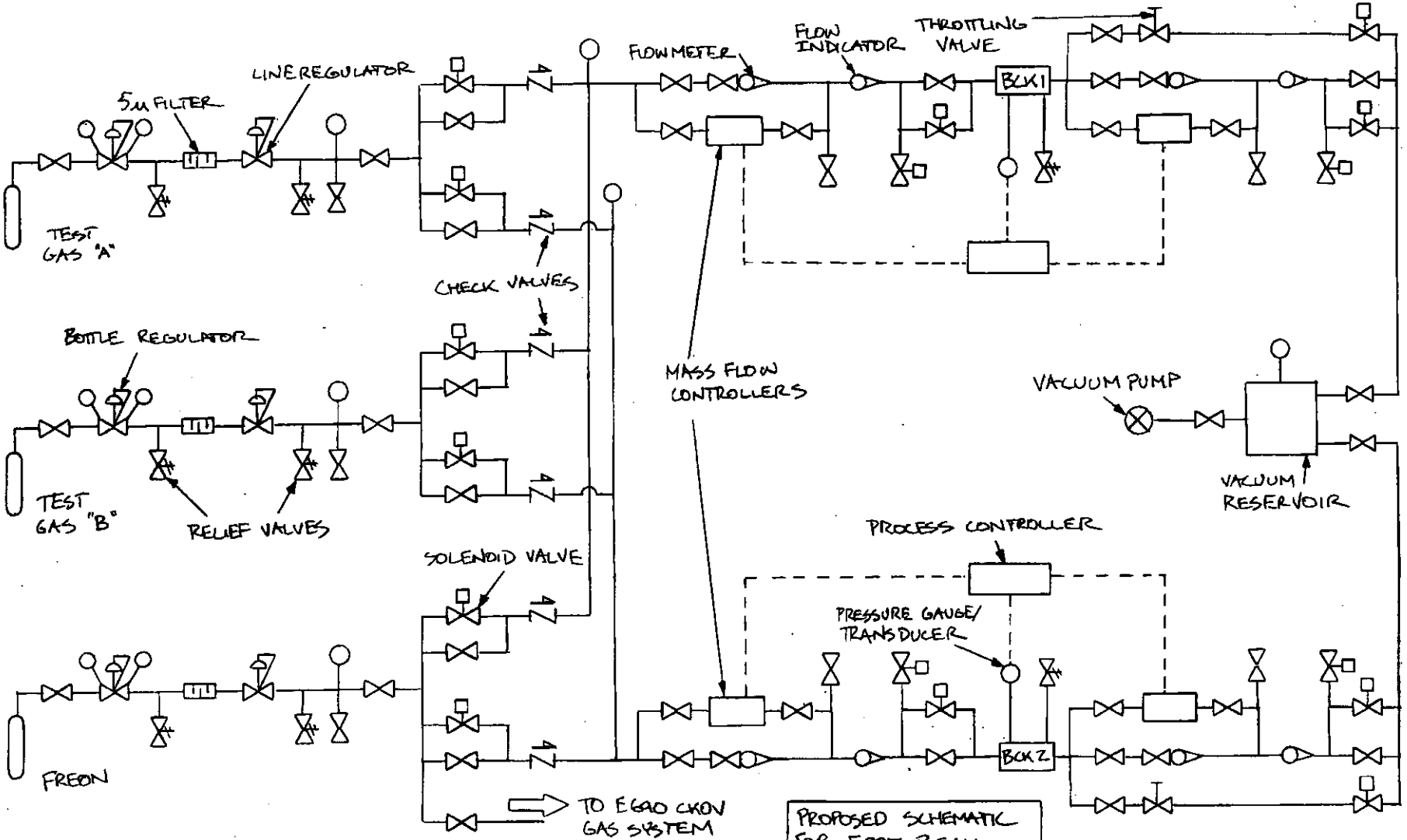

PROPOSED SCHEMATIC FOR E907 BEAM CERENKOV GAS SYSTEM

D. NORTHACKER | 1/6/03