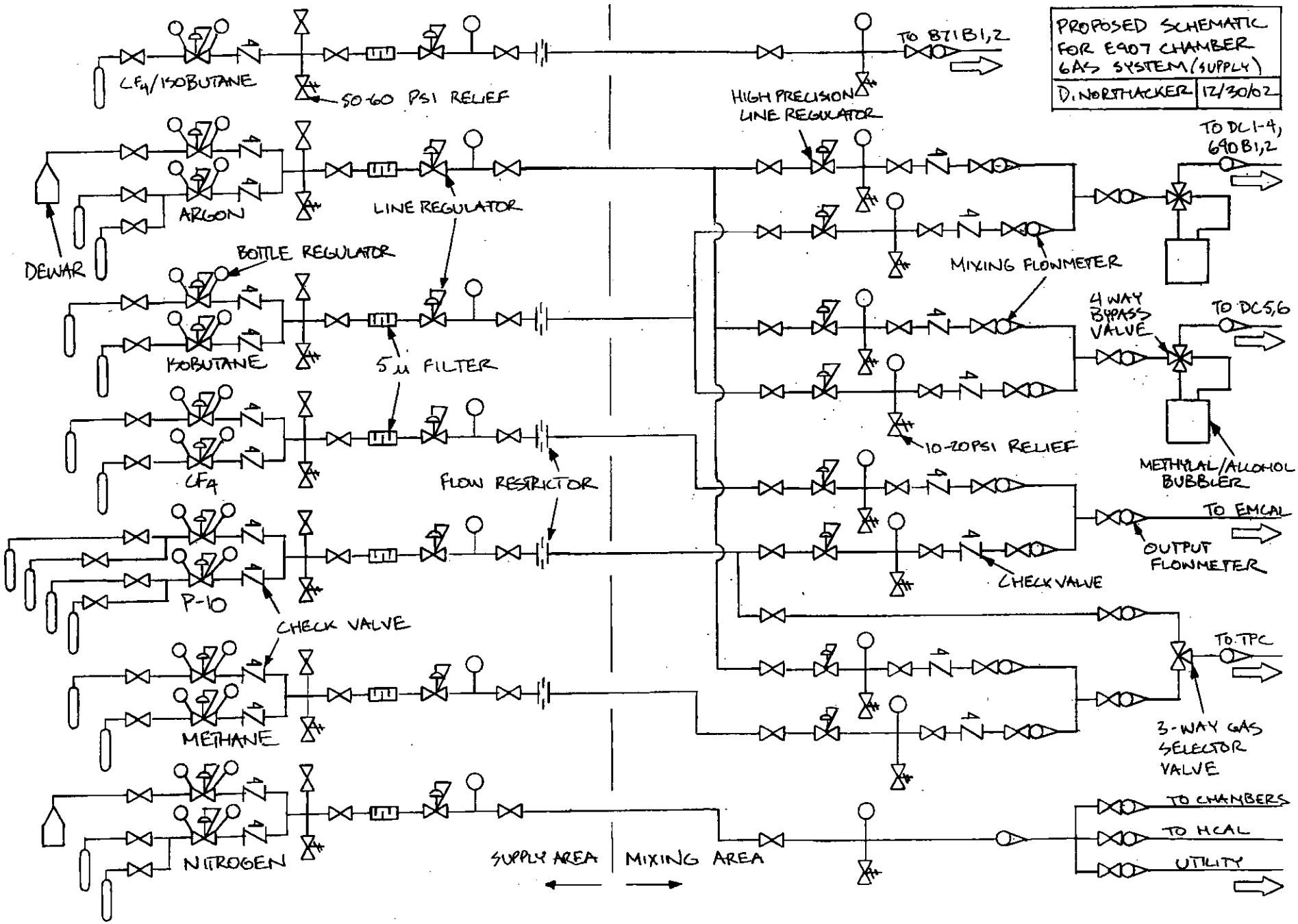
PROPOSED SCHEMATIC FOR E907 CHAMBER GAS SYSTEM (SUPPLY)
D. NORTHACKER
12/30/02
CF4/ISOBUTANE
50-60 PSI RELIEF
TO B71B1,2
HIGH PRECISION LINE REGULATOR
TO DC1-4, 690B1,2
ARGON
LINE REGULATOR
DEWAR
BOTTLE REGULATOR
MIXING FLOWMETER
4 WAY BYPASS VALVE
TO DC5,6
ISOBUTANE
5μ FILTER
10-20PSI RELIEF
CF4
FLOW RESTRICTOR
METHYLAL/ALCOHOL BUBBLER
TO EMCAL
OUTPUT FLOWMETER
P-10
CHECK VALVE
CHECK VALVE
TO TPC
METHANE
3-WAY GAS SELECTOR VALVE
TO CHAMBERS
TO HCAL
UTILITY
NITROGEN
SUPPLY AREA
MIXING AREA