REV	DESCRIPTION	DRAWN	DATE
		APPROVED	DATE

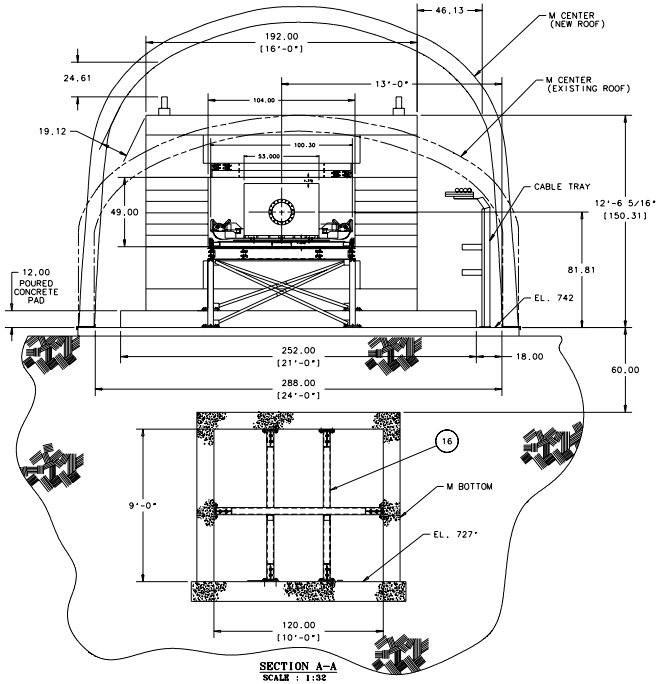

SECTION A-A
SCALE : 1:32

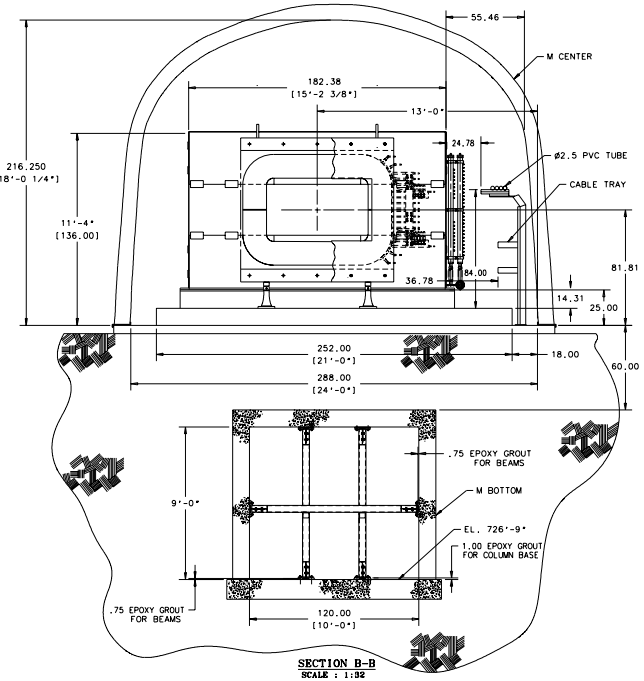

SECTION B-B
SCALE : 1:32

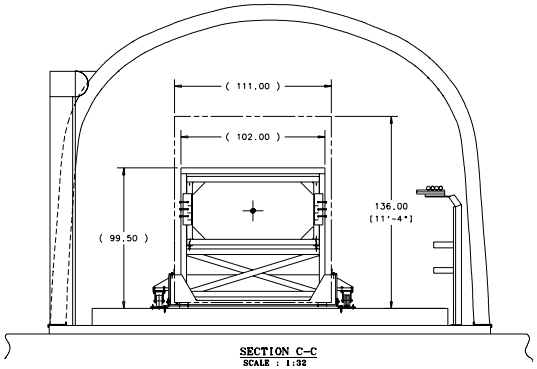

SECTION C-C
SCALE : 1:32

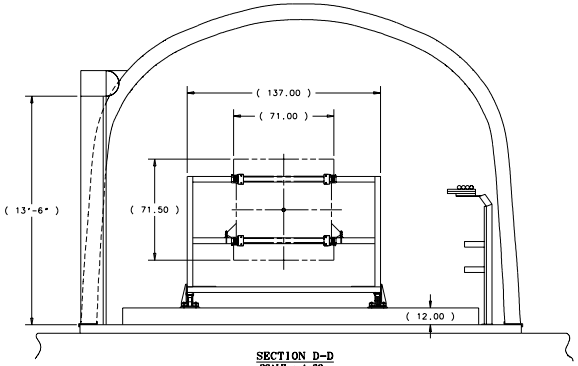

SECTION D-D
SCALE : 1:32

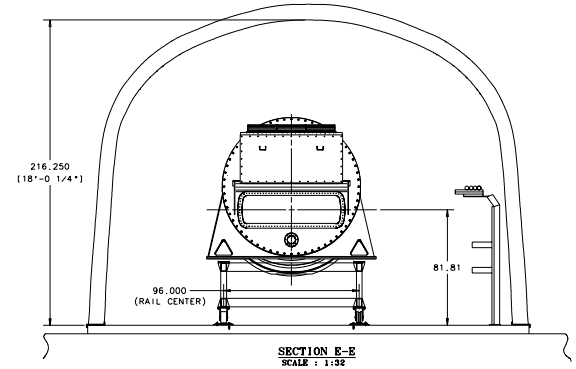

SECTION E-E
SCALE : 1:32

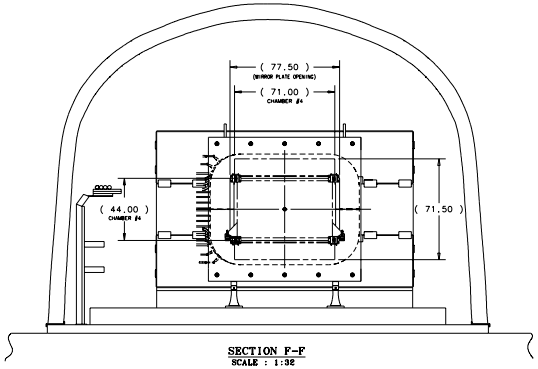

SECTION F-F
SCALE : 1:32

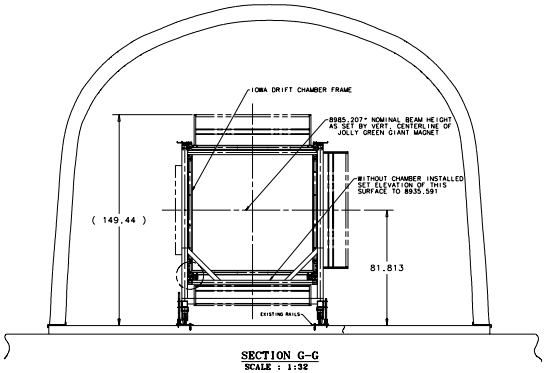

SECTION G-G
SCALE : 1:32

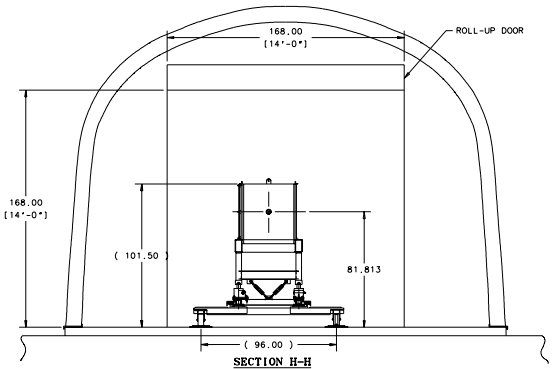

SECTION H-H
SCALE : 1:32

ITEM	PART NO.	DESCRIPTION OR SIZE	QTY.
PARTS LIST			

UNLESS OTHERWISE SPECIFIED			ORIGINATOR	J.KILMER	09-JUL-2001
.XX	.XXX	ANGLES	DRAWN	G.SMITH	06-JUL-2003
± ---	± ---	± ---	CHECKED		
1. BREAK ALL SHARP EDGES			APPROVED		
2. DO NOT SCALE DRAWING. 3. DIMENSIONS BASED UPON ANSI Y14.5M-1982			USED ON	E907 BEAMLINE	
4. MAX. ALL MACH. SURFACES			MATERIAL	-----	

FERMI NATIONAL ACCELERATOR LABORATORY
UNITED STATES DEPARTMENT OF ENERGY

PPD/MECHANICAL DEPT.
E907 M-CENTER BEAMLINE
EQUIPMENT LAYOUT

SCALE	DRAWING NUMBER	SHEET	REV
1 : 32	3907.500-ME-397568	2 OF 2	

CREATED WITH : Idea8m4 GROUP: PPD/MECHANICAL DEPARTMENT