An Upgrade of the E907 Spectrometer Readout

C.Dukes, K.Nelson, A.Norman

October 2004

FNAL E907 Collaboration

M.Austin, R.J.Peterson

University of Colorado, Boulder, Colorado 80309

W.Baker, D.Carey, J.Hylen, C.Johnstone, M.Kostin, H.Meyers, N.Mokhov, A.Para, R.Raja, S.Stringanov

Fermi National Accelerator Laboratory, Batavia Illinois 60510

G.Feldman, A.Lebedev, S.Seun

Harvard University, Cambridge, Massachusetts 02138

P.Hanlet, O.Kamaev, D.Kaplan, H.Rubin, N.Solomey, C.White

Illinois Institute of Technology, Chicago, Illinois 60616

U.Akgun, G.Aydin, F.Duru, Y.Gunyadin, Y.Onel, A.Penzo

University of Iowa, Iowa City, Iowa 52242

N.Graf, M.Messier, J.Paley

Indiana University, Bloomington, Indiana 47405

P.D.BarnesJr., E.Hartouni, M.Heffner, D.Lange, R.Soltz, D.Wright

Lawrence Livermore Laboratory,Livermore, California 94551

R.L.Abrams, H.R.Gustafson, M.Longo, H-K.Park, D.Rajaram

University of Michigan, Ann Arbor, Michigan 48109

A.Bujak, L.Gutay, D.E.Miller

Purdue University, West Lafayette, Indiana 47907

T.Bergfeld, A.Godley, S.R.Mishra, C.Rosenfeld, K.Wu

University of South Carolina, Columbia, South Carolina 29208

C.Dukes, H.Lane, L.C.Lu, C.Materniak, K.Nelson, A.Norman

University of Virginia, Charlottesville, Virginia 22904

Introduction

- The full acceptance spectrometer used in the Main Injector Particle Production (MIPP) experiment E907 at FNAL is an ideal candidate for performing detailed measurements to verify the existence exotic 5-quark states with unique quantum numbers that set them apart from the well known properties of both the meson and baryon sectors.

In particular:

$$\Theta^{+}(1540),\ \ \Theta^{*++},\ \ \Xi^{--}_{3/2}(1860),\ \ \Xi^{+}_{3/2} \tag{1}$$

- The limiting factor that controls the E907 spectrometer's sensitivity to the production of these states is the data readout and acquisition of the time projection chamber (TPC).

- In the current configuration, measured during the ’04 running period, the total data acquisition rate is limited to a instantaneous rate of $21Hz$ with a planned DSP firmware modification that increases instantaneous the rate to the $60Hz$.
- Program planning changes to the accelerator schedule will result in a duty factor of 1/60 during the MINOS running period, resulting in an effective maximum data acquisition rate of 1Hz.
- At this data rate, 2.9 pentaquark events would be expected in 10^7s of running.

Introduction (cont.)

If the data acquisition bottle neck can be eliminated, the expected event rate can rise to $\approx 2 \times 10^3$ events in 10^7s.

How do we do this?

- Restructure the acquisition model to handle a burst data rate 3kHz
- Increase the beam intensity to $\mathscr{O}(250kHz)$
- Upgrade the TPC front end electronics to follow the Alice TPC design based on a preamp/shaper – "PASA", and a fast ADC with pedestal/baseline subtraction and zero suppression – "ALTRO"
- Upgrade the E&M calorimeter to use faster ADCs in a further paralleled design.
- Update the TDC readouts to use a buffered, parallel readout.

The goal is a system wide increase in the readout/acquisition rate by a factor of 50 over the current theoretic limit.

Part I

Upgrade Motivation

MIPP E907

E907 will resume running in Dec. ’04 and continue through July ’05.

The original proposal goals:

- Cross sections on NUMI targets for neutrino spectra predictions
- Proton-nucleus cross sections for proton radiography
- Proton/neutron cross sections for hadronic fragmentation scaling laws

Will be completed by the end of the ’05 running period.

- Continuation of the E907 physics program does not serve as the primary motivation for performing an upgrade to the spectrometer.

However, if a specific target or topic from the E907 physics program required re-examination, it could be added as an auxiliary topic to the upgraded spectrometer without adversely affecting the sensitivity of the new experiment.

Exotic States

There is evidence for the existence of exotic baryonic states that follow a 5-quark “anti-decuplet” hierarchy.

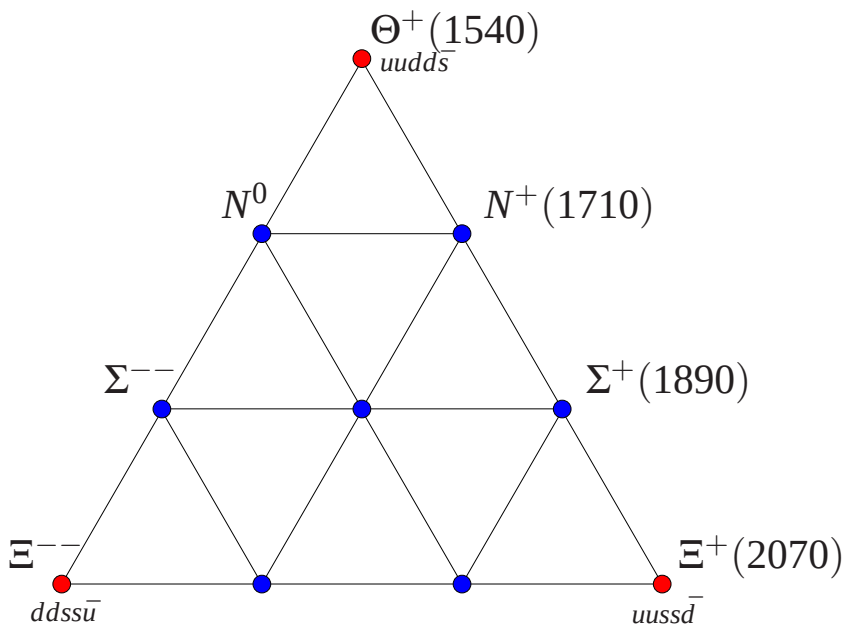

FIG. 1: Pentaquark Anti-decuplet

Pentaquark Properties

The pentaquark system represents a new set of states with properties that differ from usual baryon and meson systems.

- "Exotic" pentaquarks have an antiquark who's flavor does not match the other four quarks:

$$(qqqq\bar{Q}) \quad e.g \quad \Theta^+ = uudd\bar{s}$$

- Standard quantum numbers can not be determined by three quarks alone:

$$\Theta^+ \; Baryon\ Number = \frac{1}{3} + \frac{1}{3} + \frac{1}{3} + \frac{1}{3} - \frac{1}{3} = 1$$

$$\Theta^+ \; Strangeness = 0 + 0 + 0 + 0 + 1 = 1$$

Pentaquark Production

Hadronic production of pentaquark candidate states should be dominated by meson-nucleon interaction [1] at the energy ranges available to the E907 spectrometer.

The Θ^+ state, leading order meson-nucleon reactions are shown in Fig. 2

- For Kaon-nucleon interactions the Θ^+ production cross section reaches 1.5mb at threshold for the reaction:

$$\sigma(KN \rightarrow \pi\Theta) \approx 1.5mb \text{ for } \sqrt{s} \approx 1.5GeV \tag{2}$$

- Pion-nucleon interactions are suppressed by a factor of 30 from the kaon production mechanism

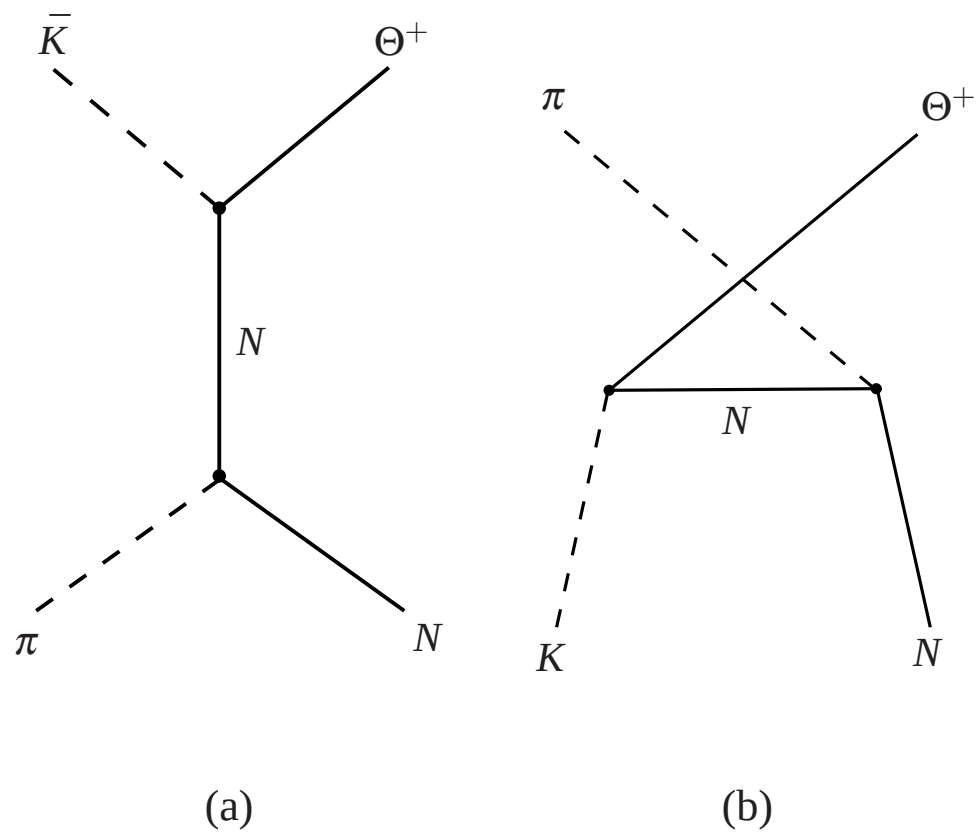

FIG. 2: Leading order contributions to Θ^+ production from meson-nucleon reactions

Pentaquark Cross Sections

The best method for producing pentaquarks with strange quark content is from kaon-nucleon interaction near threshold.

Reaction	$\sigma(\Theta^+)$
kaon-nucleon	1500 μb
pion-nucleon	50 μb
proton-proton	20 μb
photo-production	0.04 μb

TABLE 1: Pentaquark production cross sections for $\Theta^+(1540)$ production near threshold[1]

Pentaquark Cross Sections (cont.)

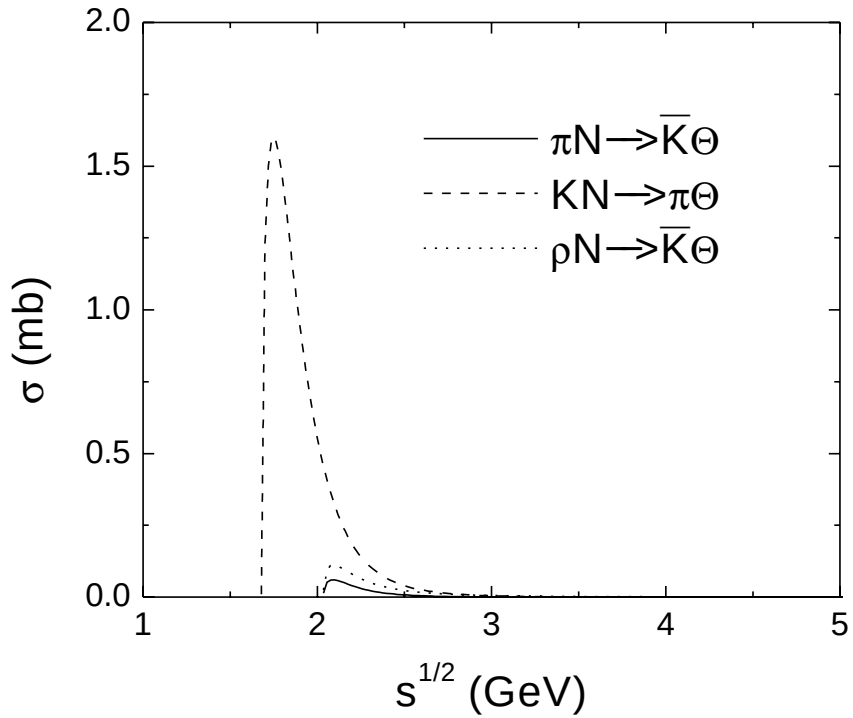

FIG. 3: Pentaquark production cross sections from meson-nucleon interactions as a function of center-of-mass energy[1].

Event Signatures

The E907 spectrometer can observe a wide range pentaquark decay final states. The primary event signature for each species of pentaquark is listed in Table 2

State	Primary Event Signatures
$\Theta^{+}(1540)$	pK_S^0
Θ^{*++}	pK^{+}
$\Xi_{3/2}^{--}(1860)$	$\Xi^{-}\pi^{-}$
$\Xi_{3/2}^{--}(1860)$	$\Sigma^{-}K^{-}$
$\Xi_{3/2}^{+}(2070?)$	$\Xi^{-}\pi^{+}\pi^{+}$
$\Xi_{3/2}^{+}(2070?)$	$\Sigma^{-}\pi^{+}K_S^0$

TABLE 2: Possible final state event signatures for pentaquark detection.

Part II

Data Rates

Event Rates

The real event rate that can be acquired by the E907 spectrometer is dependent upon:

- Incident particle flux
- Target thickness
- Accelerator duty factor
- Maximum trigger rate
- Pentaquark production cross section
- Spectrometer acceptance

Beam Flux and Target

Due to the significantly larger theorized kaon-nucleon production cross section for pentaquarks, it becomes advantageous to tune the beam energy and primary target angle to enrich the kaon sample in the secondary beam.

With the current targeting angles, the maximums in the kaon fraction are found at:

$$\begin{aligned} K^- &\rightarrow 5.37\% \;\; @30GeV/c \\ K^+ &\rightarrow 4.97\% \;\; @25GeV/c \end{aligned} \tag{3}$$

- The only way increase the kaon flux is to vary the targeting angle to increase the yield, or up the overall beam intensity.

Beam Flux and Target (cont.)

The drift time from the center of the TPC down to the readout is on the order of 8μs.

This drift time sets the maximum incident flux that can pass through the detector before multiple beam tracks will begin to “dirty” the events of interest.

- The maximum incident flux possible on target while retaining on average one beam particle per event is 125kHz.
- Operation at 250kHz-500kHz is possible by offline rejection of extra beam tracks.

Beam Flux and Target (cont.)

The proposed target materials for a dedicated pentaquark search are a set of 2% interaction length cryogenic cells.

- Liquid hydrogen at 2 atmospheres to provide a simple proton target
- Liquid deuterium at 2 atmospheres to provide a simple neutron target

The possibility of using a more complicated 1% nuclear target also exists.

Available Data Rates

Using the kaon, pion, proton fractions, target type and incident beam flux we determine the maximum available data rate for each stream.

Beam Flux	Target	Kaon Fraction	Kaon Int.	Pion Int.	Proton Int.
125kHz	1%	5.37%	67	582	600
125kHz	2%	5.37%	134	1165	1200
250kHz	2%	5.37%	268	2330	2400
500kHz	2%	5.37%	537	4660	4800

TABLE 3: Kaon, pion and proton data stream interaction rates.

Expected Event Cross Sections

The E907 upgrade will probe the kaon-nucleon cross section off resonance at an expected level of 1μb.

Similarly, for the proton-proton cross section at $\sqrt{s} > 5.5$ GeV, the expected cross section is $\mathscr{O}(2\mu b)$, as shown in Fig. 4.

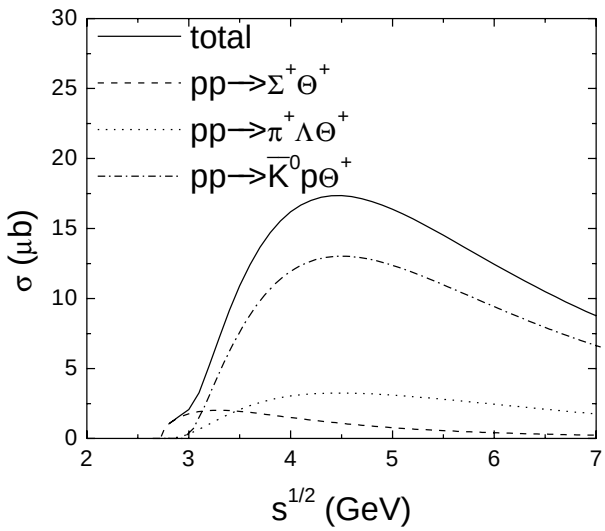

FIG. 4: Pentaquark production cross sections from proton-proton interactions as a function of center-of-mass energy[1].

Expected Event Rates

Based upon a real run time of 10^7s, the following event rates would be expected in the upgraded E907 spectrometer, assuming a maximum data throughput of 3kHz.

Conditions						Pentaquarks (K)	Pentaquarks (π/p)
2% Target	1μb σ_{pq}	1s spill	1 spill/min	125kHz beam	5% accept	39	684
2% Target	1μb σ_{pq}	2s spill	1 spill/min	125kHz beam	5% accept	77	1368
2% Target	1μb σ_{pq}	1s spill	2 spill/min	125kHz beam	5% accept	77	1368
2% Target	1μb σ_{pq}	1s spill	2 spill/min	250kHz beam	5% accept	155	1728
2% Target	1μb σ_{pq}	1s spill	2 spill/min	500kHz beam	5% accept	309	1728
2% Target	1μb σ_{pq}	1s spill	20 spill/min	500kHz beam	5% accept	3093	17280

TABLE 4: Kaon, pion and proton data stream interaction rates.

Part III

TPC Readout

Readout Goal

The current TPC operated at a maximum sustained rate of 21Hz during the 2004 run period, resulting in an overall 99.9% experimental dead time.

- For the 2005 run period the maximum sustained readout rate should climb to 60Hz.
- This will still result in a 99.9% dead time.

To achieve the physics goals of the proposed pentaquark program requires that this bottle neck be eliminated.

The absolute maximum data acquisition rate that could be achieved from the E907 TPC is capped by the physical limit of 3kHz at which the TPC gating grid can be pulsed.

We intend to achieve the 3kHz limit.

Readout at 3kHz

- Sustained operation of the TPC at a 3kHz rate requires the full system to readout in less than 0.3*ms*.
- To allow for non-uniformities in the event rate, we require that the electronics system operate with a maximum time per event transaction less than 0.2*ms*.

With an average zero suppressed event size of 115kb, this results in the requirement that the full detector readout system be capable of handling throughput of 575mb/s. The proposed 5-way parallel readout control system then places a throughput requirement of only 115mb/s per primary data pathway[a].

- This requirement is easily achievable using existing technologies developed for the ALICE TPC and the BONUS TPC being constructed at Jefferson Lab.

[a] Includes channel addressing transactions

The ALICE Readout System

The ALICE TPC uses a series of custom designed ASICs to handle both the analog and digital portions of the readout.

- Each “PASA” chip serves as the preamp and shaper for 16 channels of the readout
- Each “ALTRO” chip serves as a fast ADC, event buffer, performs zero suppression and has the ability to perform baseline corrections.
- The Readout Control Units (RCU) interface to the local bus to provide triggers, clocks and other control lines to the system while also collecting and transmitting data off the front end units via a standardized protocol (USB, Cern SLINK, PCI Mezzanine)

The generalized ALICE readout system is pictured in Fig. 5

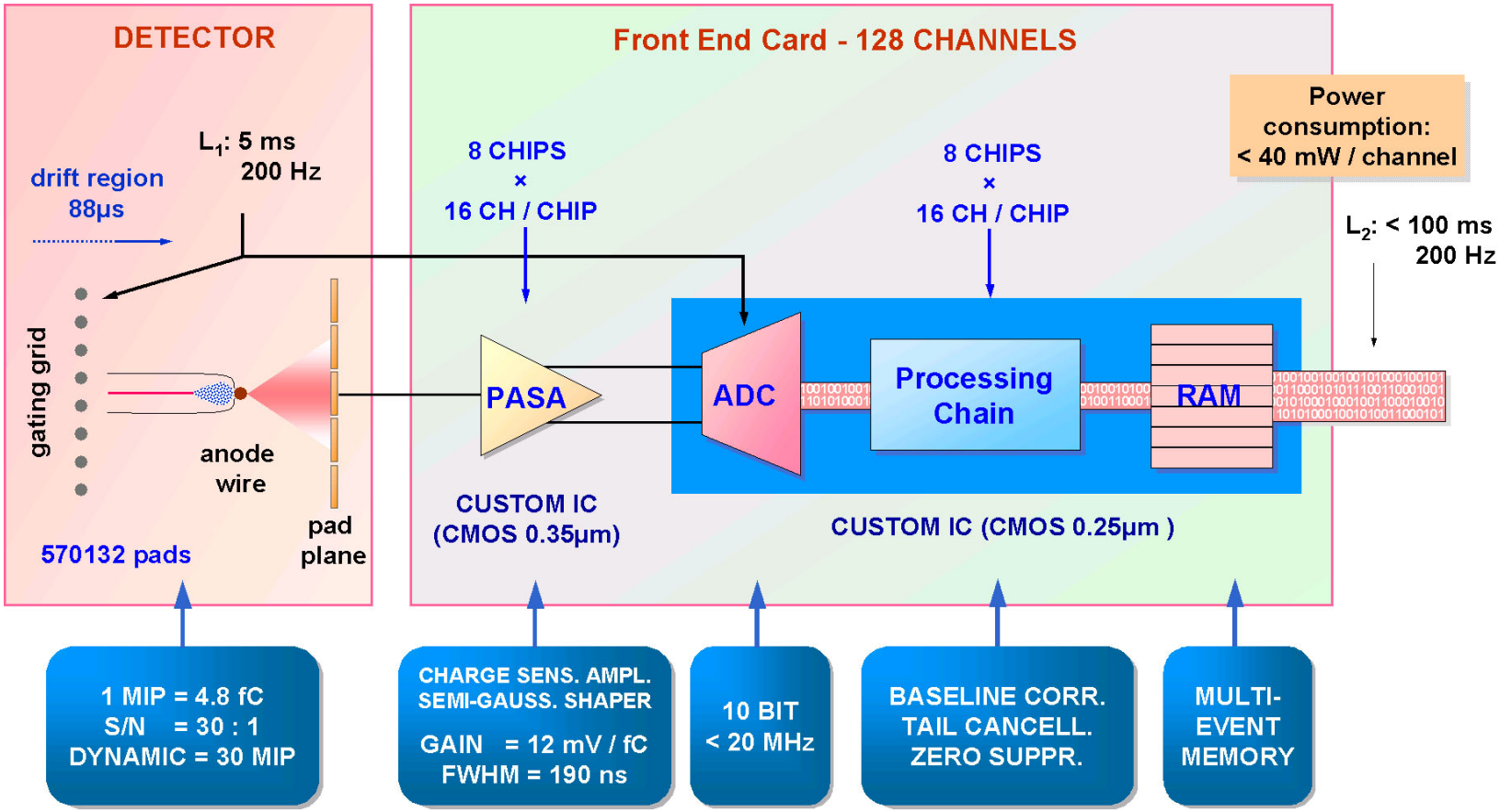

FIG. 5: ALICE TPC Readout System

Customization of the ALICE Electronics

- The form factor of the ALICE Front End Cards (FECs) differs significantly from the design of the current “sticks” used in the E907 TPC. New circuit boards incorporating the the PASA and ALTRO chips will need to be designed and fabricated to match the footprint of the current front end electronics.
- For the MIPP TPC, a time window of < 250 clock cycles would be used.
- This time window allows for the ALTRO chips to buffer 8 events
- For stability and heat load, the ALTRO chip bus would be reduced to 20MHz from the normal design limit of 40MHz.

Readout Control Units (RCU)

The Readout Control Units are designed with two branch buses, each designed to service 12-13 front end cards.

For the E907 TPC with 15,360 channels spread over 128 front end cards a minimum of 5 RCUs would be used to perform the data extraction from the PASA/ALTRO chain.

The number of RCUs can be increased to reduce the load on each data pathway.

There is an option to fully buffer the resulting data single board computer memories while it awaits event building.

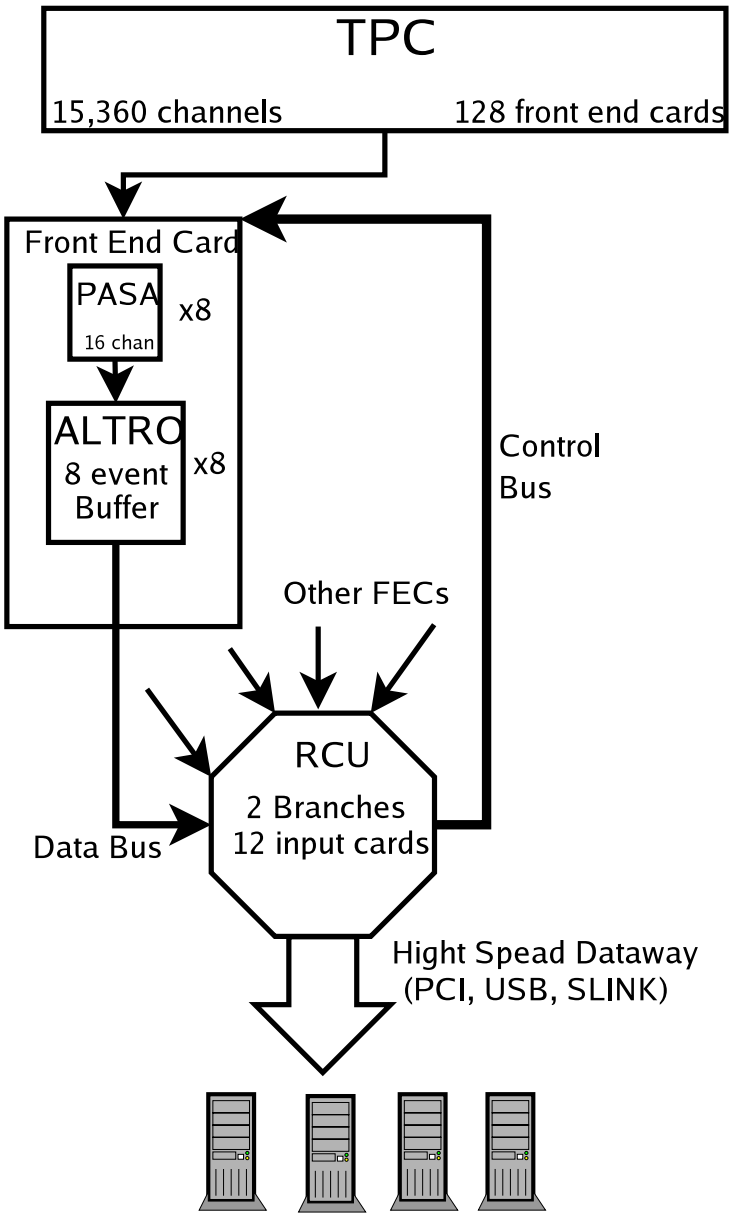

FIG. 6: Upgraded TPC Readout System

Cost

The ALICE solution has a cost per channel of approximately $10.

The cost is only low if the order for the ASICs can be done as a subset of the chips being ordered for the ALICE TPC and BONUS.

The production run is slated for Jan 05 with an extra $\approx$ 1050 chips dependent upon yield.

To secure these component would require on the order of $150k.

Options #2

In the event that the PASA/ALTRO solution is not available, a second upgrade option exists to replace just the digital portion of the current sticks.

- Uses high speed, high density ADC chip for digitization.
- Signals are passed to an FPGA for zero suppression
- A high speed transceiver negotiates with the acquisition computers over a standard protocol.
- Buffering is done PC memory.

Options #2 has a cost per channel of approximately $40 based on the ADC and FPGA choices.

Does not depend on special ASICs runs.

Time Scale

The following are the major milestones that would be needed to accomplish the proposed upgrade to the spectrometer and perform a dedicated pentaquark program.

- Present a proposal to the PAC (Oct 04)
- Obtain physics approval for $\mathscr{O}(10^7 s$ of beam after the July 05 shutdown (Nov 04)
- Secure funding for procurement of ALICE electronics components (Prior to Jan 05)
- Design and Fabricate new front end boards for the TPC (Spring 05)
- Install new front end boards for the TPC (Aug/Sept 05)
- Commission the upgraded detector. (Sept 05)
- Mount 100 days of dedicated pentaquark running. (Fall/Winter 05)

Other Detectors

Once the TPC is upgraded, some restructuring of the current readout system for the other detector subsystems is necessary.

In particular:

- The electromagnetic calorimeter (640 channels) will be updated to use a faster ADC, with the possibility of expanding the number of ADCs used to reduce the load due to multiplexing.
- TDC crates readouts will need to be modified to use the buffering features of the controllers already in place. Some gains can be had by increasing the parallelization crates to eliminate slow daisy-chains.

List of Slides

2 FNAL E907 Collaboration

Introduction

4 Introduction

6 Introduction (cont.)

Motivation

8 MIPP E907

9 Exotic States

10 Pentaquark Properties

11 Pentaquark Production

13 Pentaquark Cross Sections

14 Pentaquark Cross Sections (cont.)

15 Event Signatures

Expected Data Rates

17 Event Rates

18 Beam Flux and Target

19 Beam Flux and Target (cont.)

20 Beam Flux and Target (cont.)

21 Available Data Rates

22 Expected Event Cross Sections

23 Expected Event Rates

TPC Electronics Upgrade

25 Readout Goal

26 Readout at 3kHz

27 The ALICE Readout System

29 Customization of the ALICE Electronics

30 Readout Control Units (RCU)

32 Cost

33 Options #2

34 Time Scale

35 Other Detectors