E690 Ckov

- Mirror plans installed in vessel. (April) (Ed/Doug/David)

- All mirrors in tact (the strapping tape held….)

- We could not recover the water damaged mirror by cleaning it. The surface in the middle of the mirror was removed.
- Other signs of aging in the mirror plans observed during cleaning and installation. But 95/96 mirrors look to be in good shape.

Looking from the target (before alignment)

Gas system considerations (I)

- (Doug)

- C4F10 lead time item is ~2 weeks.
  - 1 fill= 3400 liters = ~$2K
- Proceeding with gas system ala E910
  - Closed system, continuous topoff. Best to account for
    - Leaks
    - Contamination
  - Estimated gas cost is <=$560/month of operation
    - Assuming leaks << atmospheric changes
  - Could still add bladder later if desired.

E910 system

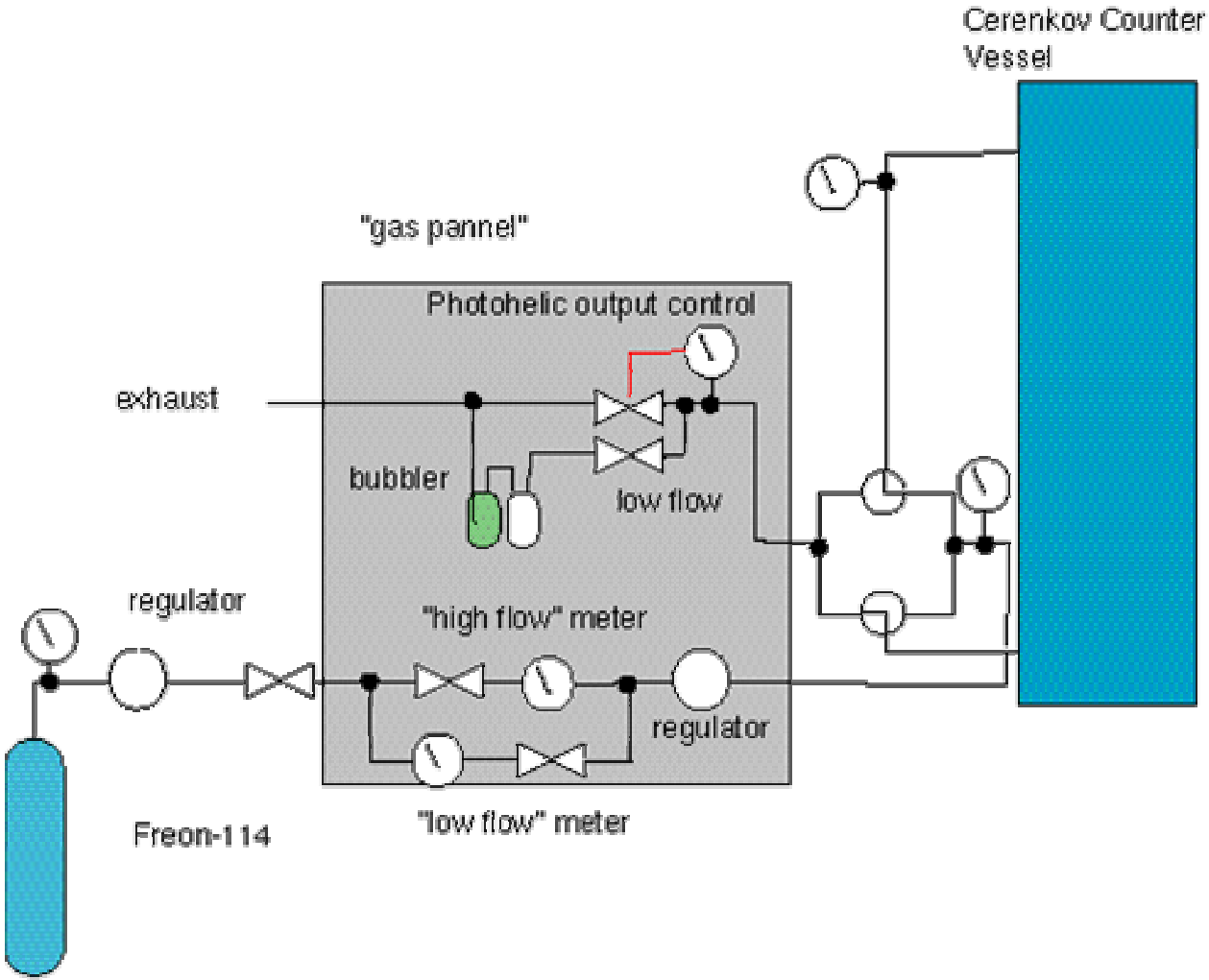

gas systemshown in "normal" flow configuration

PMT testing

- Now using Lab 5 PMT test setup (Hogan Nguyen, Peter Shanahan). Thanks to Holgan for getting us started.
  - Far better than setup we had planned to finish in Lab6.
  - Linearity test correlating pin diodes with PMT.
    - 2249 for PMT, 20 bit ADC for pin diodes.

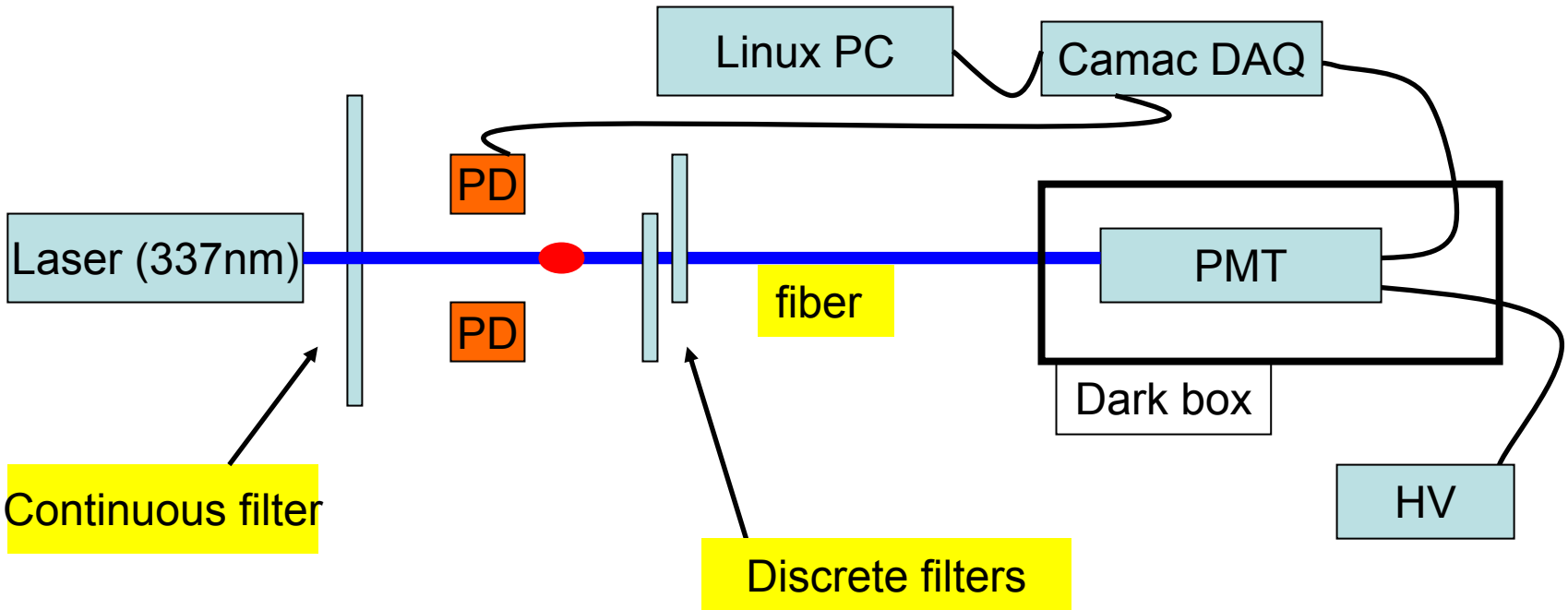

Example linearity test

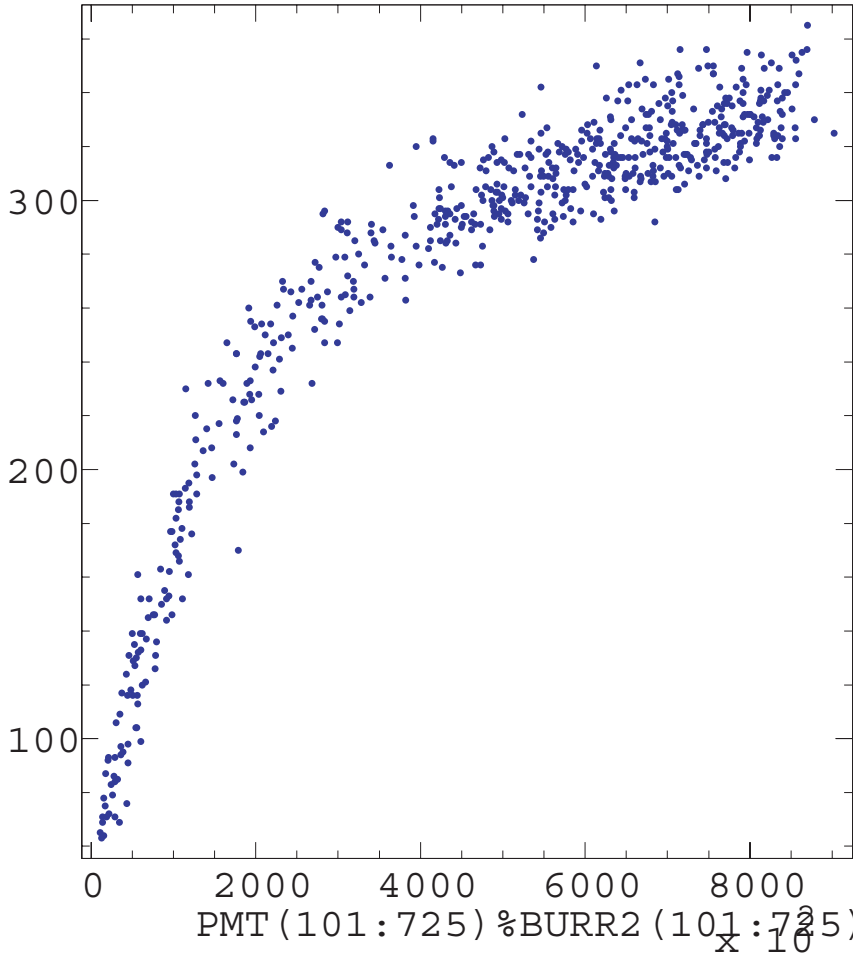

- 2200 Volts (E910 running point)

PMT Testing

- Looking at gain/noise vs high voltage
  - Not yet testing digital outputs. Second round once analog outputs are ok.
  - First full day of testing was Friday.
    - 21 PMT/base combinations tested.
    - 3 PMTs found to be bad. All bases ok so far.

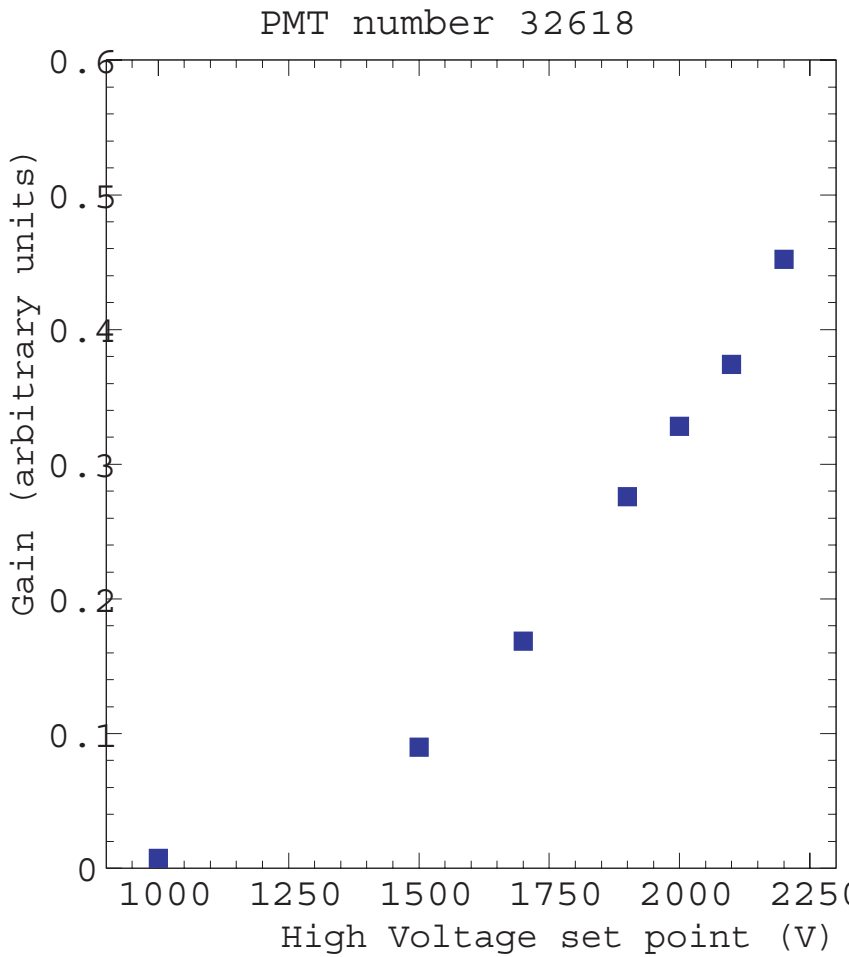

Now till Tuesday

- (Ed/David)

- Finish things that require access to interior of Ckov vessel.
  - Complete mirror plane alignment
  - LED test system
- Install outer shields on vessel (currently sitting downstream of the RICH)
- More PMT testing.
- Cabling plan if location of ADCs is “finalized”