REV.	DESCRIPTION	DRAWN	DATE
		APPROVED	DATE
A	PLATE WAS 1/8 X 8 1/2 X 8.50	G SMITH	3/12/02
		C NILA	3/28/02

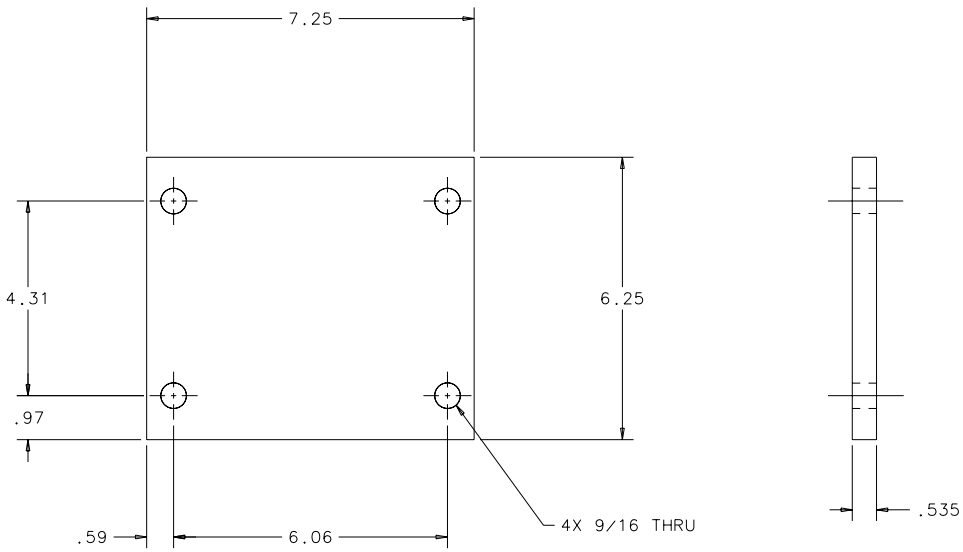

ITEM NO.	PART NO.	DESCRIPTION OR SIZE	QTY. REQ.
PARTS LIST			

UNLESS OTHERWISE SPECIFIED			ORIGINATOR	J KILMER	8/01
.XX	.XXX	ANGLES	DRAWN	G SMITH	10/17/01
± .03	±.010	± —	CHECKED	C NILA	10/17/01
			APPROVED	JAMES R.KILMER	10/17/01

1. BREAK ALL SHARP EDGES .015 MAX.
2. DO NOT SCALE DRWG.
3. DIMENSIONING IN ACCORD WITH ANSI Y14.5M-1982 STD'S.
4. ALL DIMENSIONS ARE IN INCHES.

125 MAX. ALL MACHINED SURFACES

USED ON: 9200.001-ME-397615

MATERIAL: HOT ROLLED FLAT 5/8 X 6.25 X 7.25 LG. (A)

FERMI NATIONAL ACCELERATOR LABORATORY
UNITED STATES DEPARTMENT OF ENERGY

PPD/MECHANICAL DEPARTMENT
E-907 RICH DETECTOR STAND
FLAT CASTER SHIM

SCALE	DRAWING NUMBER	SHEET NO.	REV.
1:2	9200.001-MC-397666	1 OF 1	A

Plotted by gsmith on 19-Apr-02 , File: 397666-01a.pff