| REV. | DESCRIPTION | DRAWN / APPROVED | DATE / DATE |
|---|---|---|---|
| A | ITEM 4 WAS 32.91 LG.;ITEM 5 20.76 LG.<br>ITEM 6 WAS 8.50 X 8.50 X .50 LG. | G SMITH<br>C NILA | 3/7/02<br>3/28/02 |
| B | WELD SYMBOL ADDED<br>QTY OF ITEM 6 WAS 2 NOW 4 | G SMITH<br>C NILA | 4/16/02<br>4/16/02 |

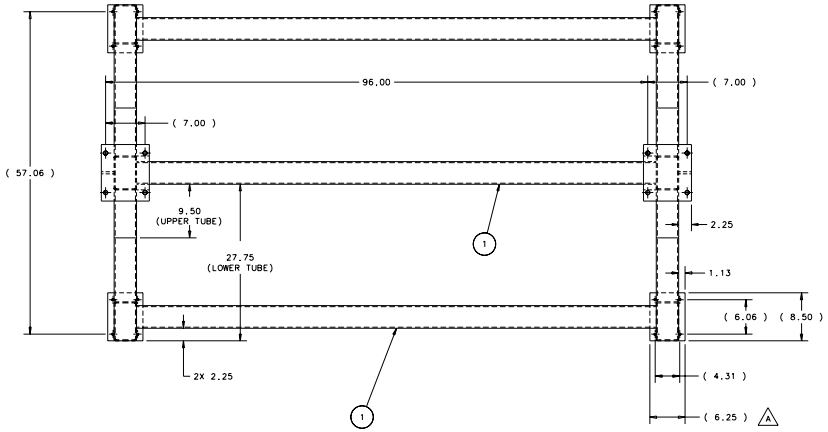


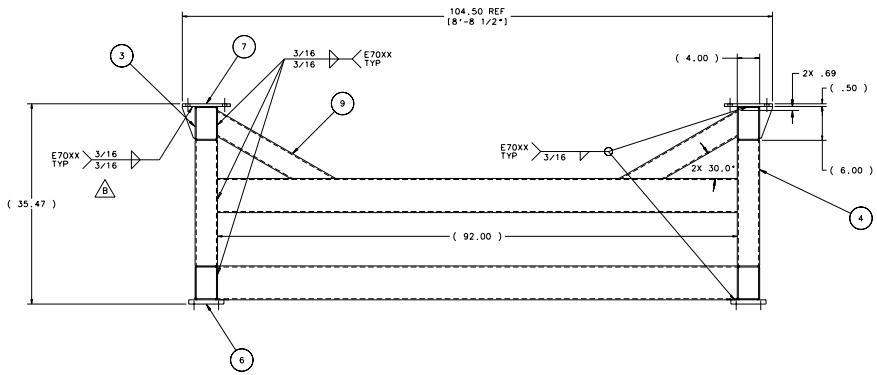


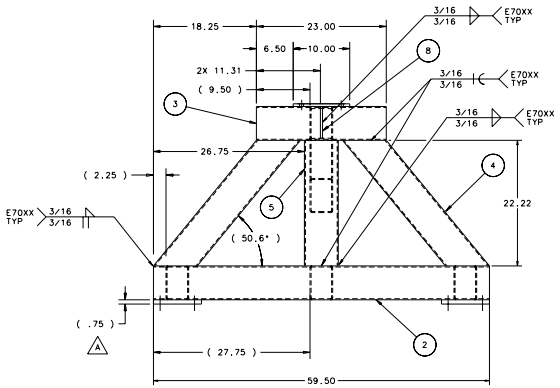


| ITEM NO. | PART NO. | DESCRIPTION OR SIZE | QTY. REQ. |
|---|---|---|---|
| 9 | COML | STEEL RECT. TUBE ASTM A 500 6 X 4 X.38 WALL X 24.13 LG. | 2 |
| 8 | MB-397665 | GUSSET | 2 |
| 7 | MC-397622 | TOP PLATE | 2 |
| 6 | MC-397621 | BASE PLATE | 4 |
| 5 | COML | STEEL RECT. TUBE ASTM A 500 6 X 4 X.19 WALL X 22.22 LG. | 2 |
| 4 | COML | STEEL RECT. TUBE ASTM A 500 6 X 4 X.19 WALL X 33.68 LG. | 4 |
| 3 | COML | STEEL RECT. TUBE ASTM A 500 6 X 4 X.19 WALL X 23.00 LG. | 2 |
| 2 | COML | STEEL RECT. TUBE ASTM A 500 6 X 4 X.19 WALL X 59.50 LG. | 2 |
| 1 | COML | STEEL RECT. TUBE ASTM A 500 6 X 4 X.19 WALL X 92.00 LG. | 4 |

PARTS LIST

| UNLESS OTHERWISE SPECIFIED | | | ORIGINATOR | J KILMER | 8/01 |
|---|---|---|---|---|---|
| .XX | .XXX | ANGLES | DRAWN | G SMITH | 9/10/01 |
| ± .06 | ± — | ± 1° | CHECKED | C NILA | 10/17/01 |
| 1. BREAK ALL SHARP EDGES .010 MAX.<br>2. DO NOT SCALE DRWG.<br>3. DIMENSIONING IN ACCORD WITH ANSI Y14.5M-1982<br>4. ALL DIMENSIONS ARE IN INCHES. | | | APPROVED | JAMES R.KILMER | 10/17/01 |
| | | | USED ON | 9200.001-ME-397615 | |
| 250 MAX. ALL MACHINED SURFACES | | | MATERIAL | SEE PARTS LIST | |

**WEIGHT : 750 LBS.**

FERMI NATIONAL ACCELERATOR LABORATORY
UNITED STATES DEPARTMENT OF ENERGY

PPD/MECHANICAL DEPARTMENT
E-907
RICH DETECTOR STAND (DOWNSTREAM)

| SCALE | DRAWING NUMBER | SHEET NO. | REV. |
|---|---|---|---|
| 1:8 | 9200.001-ME-397617 | 1 OF 1 | B |

Plotted by gsmith on 19-Apr-02 , File: 397617-01u.prf