REV.	DESCRIPTION	DRAWN / APPROVED	DATE / DATE
A	REDRAWN PLATE WAS 1/2 X 12 X 240 LG. ANGLE WAS 1 1/4 X 1 1/4 X 1/4 X 144	G SMITH	3/12/02
		C NILA	3/28/02
B	ITEMS 1&2 PREFIX # ADDED OVERALL LENGTH WAS 863.75	G SMITH	4/16/02
		C NILA	4/16/02

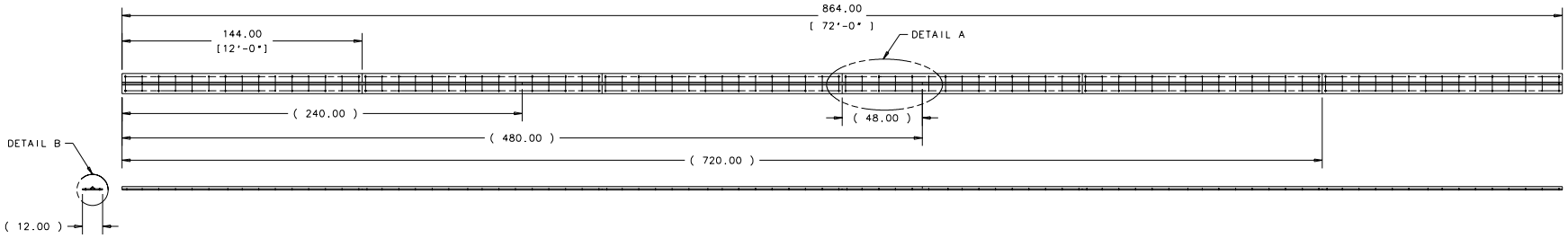

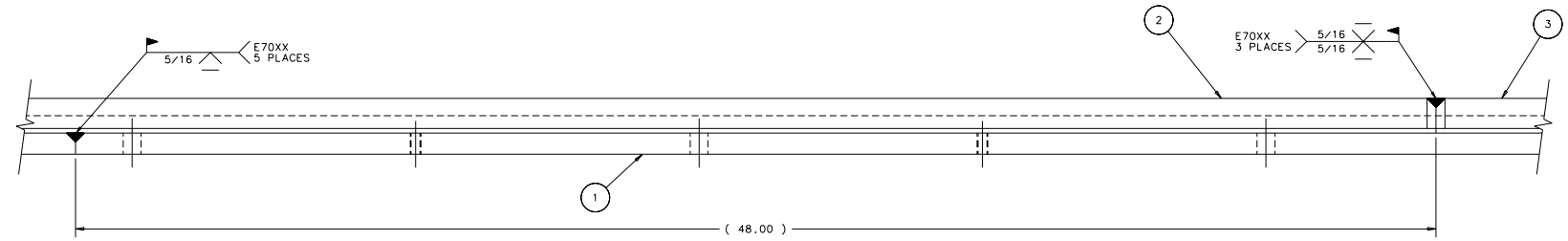

DETAIL A
SCALE: 1/2

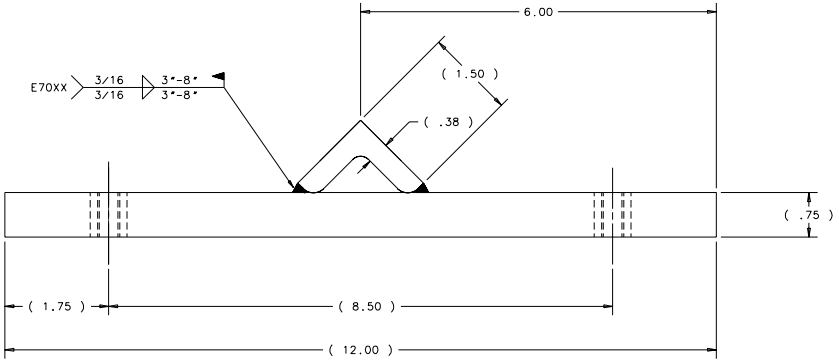

DETAIL B
SCALE: 1:1

ITEM NO.	PART NO.	DESCRIPTION OR SIZE	QTY. REQ.
3	3907.500 MC-397759-2	GUIDE ANGLE (SHORT)	1
2	3907.500 MC-397759-1	GUIDE ANGLE (LONG)	3
1	MD-397620	RICH DETECTOR / CALORIMETER RAIL PLATE	6

PARTS LIST

UNLESS OTHERWISE SPECIFIED				
.XX	.XXX	ANGLES	ORIGINATOR	J KILMER 9/01
± .06	± ——	± ——	DRAWN	G SMITH 9/18/01
			CHECKED	C NILA 10/17/01
			APPROVED	JAMES R.KILMER 10/17/01

1. BREAK ALL SHARP EDGES .015 MAX.
2. DO NOT SCALE DRWG.
3. DIMENSIONING IN ACCORD WITH ANSI Y14.5M-1982 STD'S.
4. ALL DIMENSIONS ARE IN INCHES.

125 MAX. ALL MACHINED SURFACES

USED ON: 9200.001-ME-397615

MATERIAL: LISTED

FERMI NATIONAL ACCELERATOR LABORATORY
UNITED STATES DEPARTMENT OF ENERGY

RD/MECHANICAL SUPPORT DEPT.
E-907 RICH DETECTOR / CALORIMETER
GUIDE RAIL ASSY

SCALE	DRAWING NUMBER	SHEET NO.	REV.
1:32 & NOTED	9200.001-MD-397619	1 OF 1	A

Plotted by gsmith on 19-Apr-02 , File: 397619-01a.pff