REV.	DESCRIPTION	DRAWN / APPROVED	DATE / DATE
A	ITEM 4 WAS 32.91 LG.;ITEM 5 20.76 LG. ITEM 6 WAS 8.50 X 8.50 X .50 LG.	G SMITH C NILA	3/7/02 3/28/02
B	WELD SYMBOL ADDED QTY OF ITEM 6 WAS 2 NOW 4	G SMITH C NILA	4/16/02 4/16/02

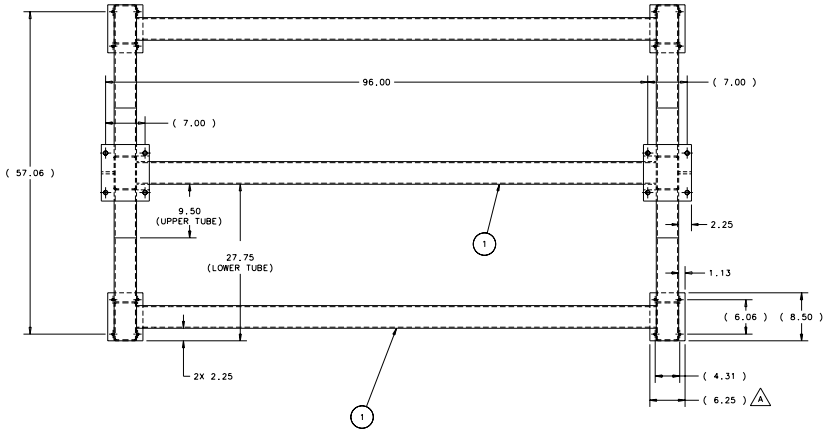

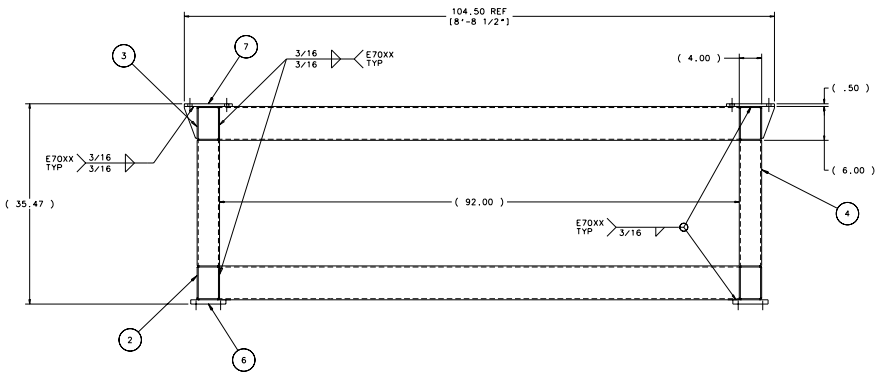

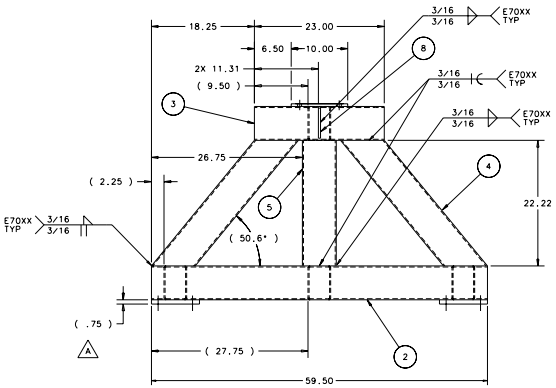

ITEM NO.	PART NO.	DESCRIPTION OR SIZE	QTY. REQ.
8	MB-397665	GUSSET	2
7	MC-397622	TOP PLATE	2
6	MC-397621	BASE PLATE	4
5	COML	STEEL RECT. TUBE ASTM A 500 6 X 4 X.19 WALL X 22.22 LG.	2
4	COML	STEEL RECT. TUBE ASTM A 500 6 X 4 X.19 WALL X 33.68 LG.	4
3	COML	STEEL RECT. TUBE ASTM A 500 6 X 4 X.19 WALL X 23.00 LG.	2
2	COML	STEEL RECT. TUBE ASTM A 500 6 X 4 X.19 WALL X 59.50 LG.	2
1	COML	STEEL RECT. TUBE ASTM A 500 6 X 4 X.19 WALL X 92.00 LG.	4

PARTS LIST

UNLESS OTHERWISE SPECIFIED			ORIGINATOR	J KILMER	8/01
.XX	.XXX	ANGLES	DRAWN	G SMITH	9/10/01
± .06	± —	± 1°	CHECKED	C NILA	10/17/01
1. BREAK ALL SHARP EDGES .015 MAX. 2. DO NOT SCALE DRWG. 3. DIMENSIONING IN ACCORD WITH ANSI Y14.5M-1982 4. ALL DIMENSIONS ARE IN INCHES.			APPROVED	JAMES R.KILMER	10/17/01
			USED ON	9200.001-ME-397615	
250 MAX. ALL MACHINED SURFACES			MATERIAL	SEE PARTS LIST	

WEIGHT : 700 LBS.

FERMI NATIONAL ACCELERATOR LABORATORY
UNITED STATES DEPARTMENT OF ENERGY

PPD/MECHANICAL DEPARTMENT
E-907
RICH DETECTOR STAND (UPSTREAM)

SCALE	DRAWING NUMBER	SHEET NO.	REV.
1:8	9200.001-ME-397616	1 OF 1	B

Plotted by gsmith on 19-Apr-02 , File: 397616-01u.prf