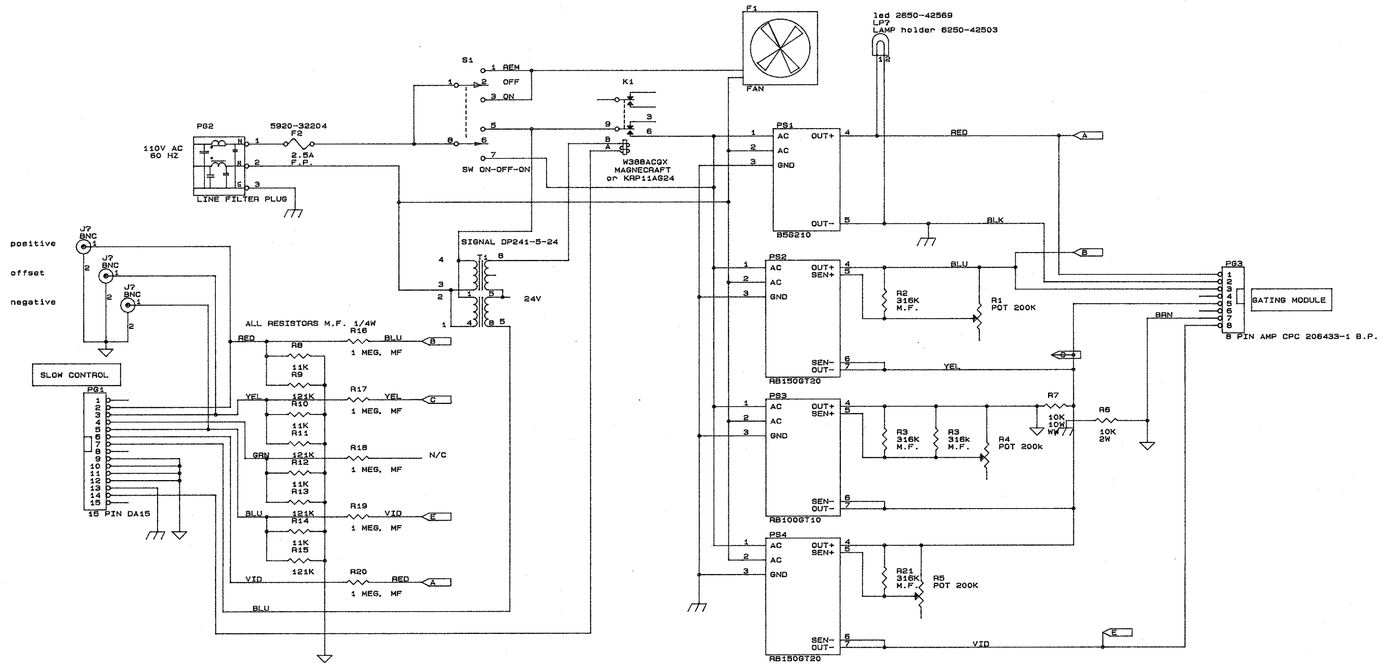

REF: 24V8393-S1A

Lawrence Berkeley Lab

Gated Grid Power Supplies
ENG. PAUL SALZ Ron Jones

Title	EOS TPC DETECTOR ELECTRONICS	
Size D	Document Number 14V8764 S1	REV A
Date: February 11, 1992	Sheet 1 of 1	