REV	DESCRIPTION	DRAWN	DATE
		APPROVED	DATE

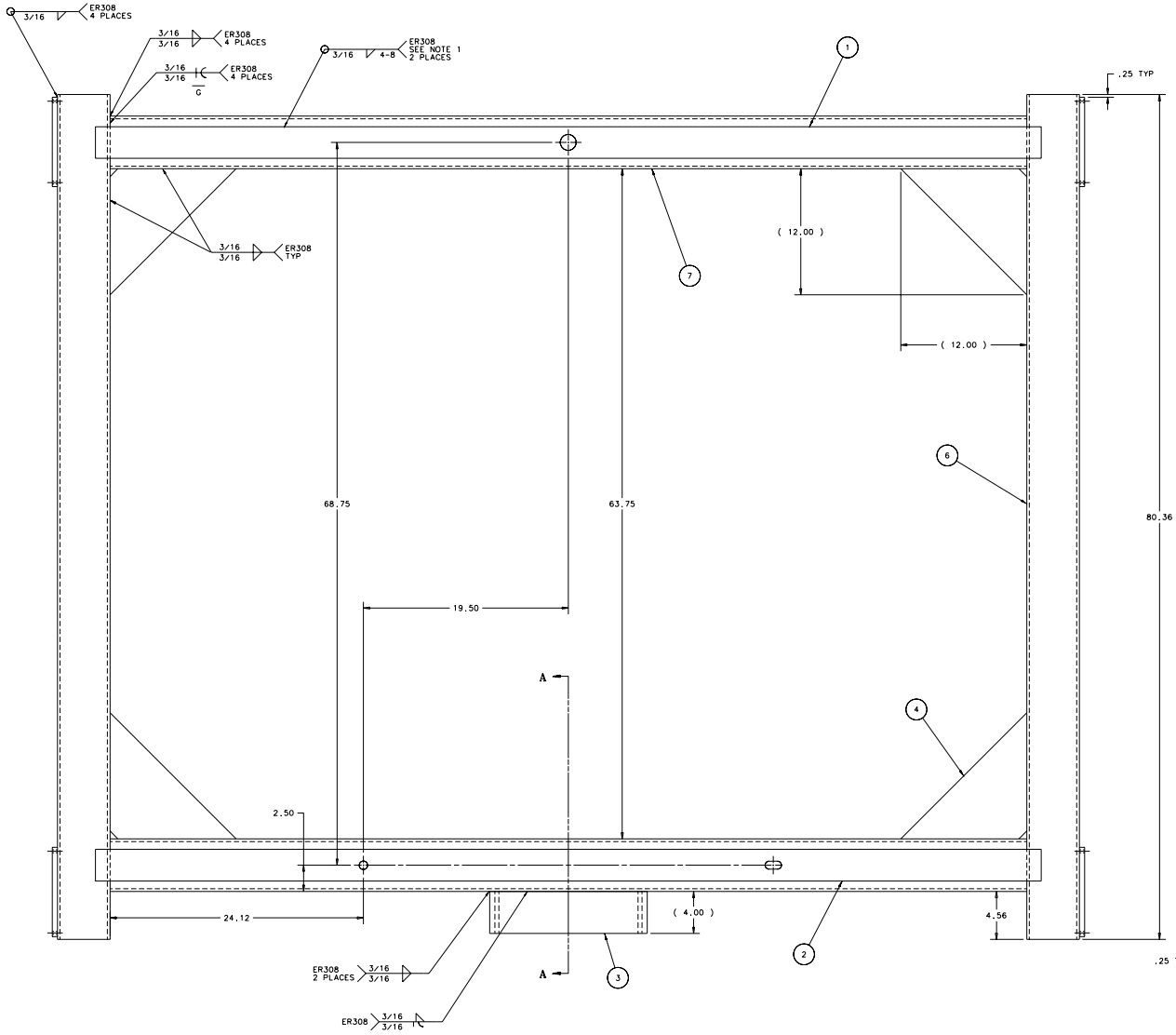

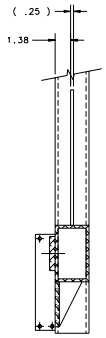

SECTION A-A

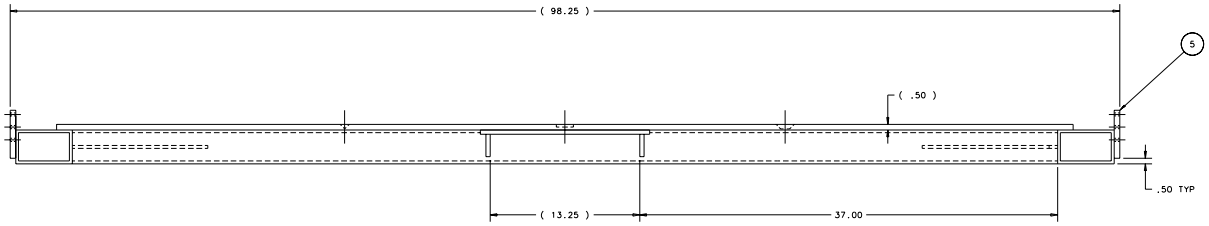

NOTES

1. WELD ITEMS 1 & 2 TO THE FRAME AFTER FRAME IS WELDED.

EST. WT = 450 LBS.

ITEM	PART NO.	DESCRIPTION OR SIZE	QTY.
7	COML	304 STAINLESS RECTAGULAR TUBING 3 X 5 X .25 WALL X 87.25 LG.	2
6	COML	304 STAINLESS RECTAGULAR TUBING 3 X 5 X .25 WALL X 80.38 LG.	2
5	MB-421053	ROLLER MOUNTING PLATE	4
4	MB-421054	GUSSET PLATE	4
3	MB-421055	PUSH BRACKET	1
2	MB-421056	U.S. LOCATING PIN HOLE PLATE	1
1	MB-421057	D.S. LOCATING PIN HOLE PLATE	1

PARTS LIST

UNLESS OTHERWISE SPECIFIED			ORIGINATOR	I.FANG	29-AUG-2002
.XX	.XXX	ANGLES	DRAWN	G.SMITH	29-AUG-2002
± .03	± .015	± ---	CHECKED	C.NILA	17-SEP-2002
			APPROVED	I.FANG	17-SEP-2002

1. BREAK ALL SHARP EDGES .125 MAX.
2. DO NOT SCALE DRAWING.
3. DIMENSIONS BASED UPON ANSI Y14.5M-1982.
4. ALL DIMENSIONS ARE INCHES
5. MAX. ALL MACH. SURFACES 125

USED ON

MATERIAL: SEE PARTS LIST ABOVE

FERMI NATIONAL ACCELERATOR LABORATORY
UNITED STATES DEPARTMENT OF ENERGY

PPD/MECHANICAL DEPARTMENT
E907 TPC
MOVABLE CART WELDMENT

SCALE	DRAWING NUMBER	SHEET	REV
1 : 4	3907.590-ME-421052	1 OF 1	

CREATED WITH : Ideas8m4 GROUP: PPD/MECHANICAL DEPARTMENT