REV	DESCRIPTION	DRAWN	DATE
		APPROVED	DATE

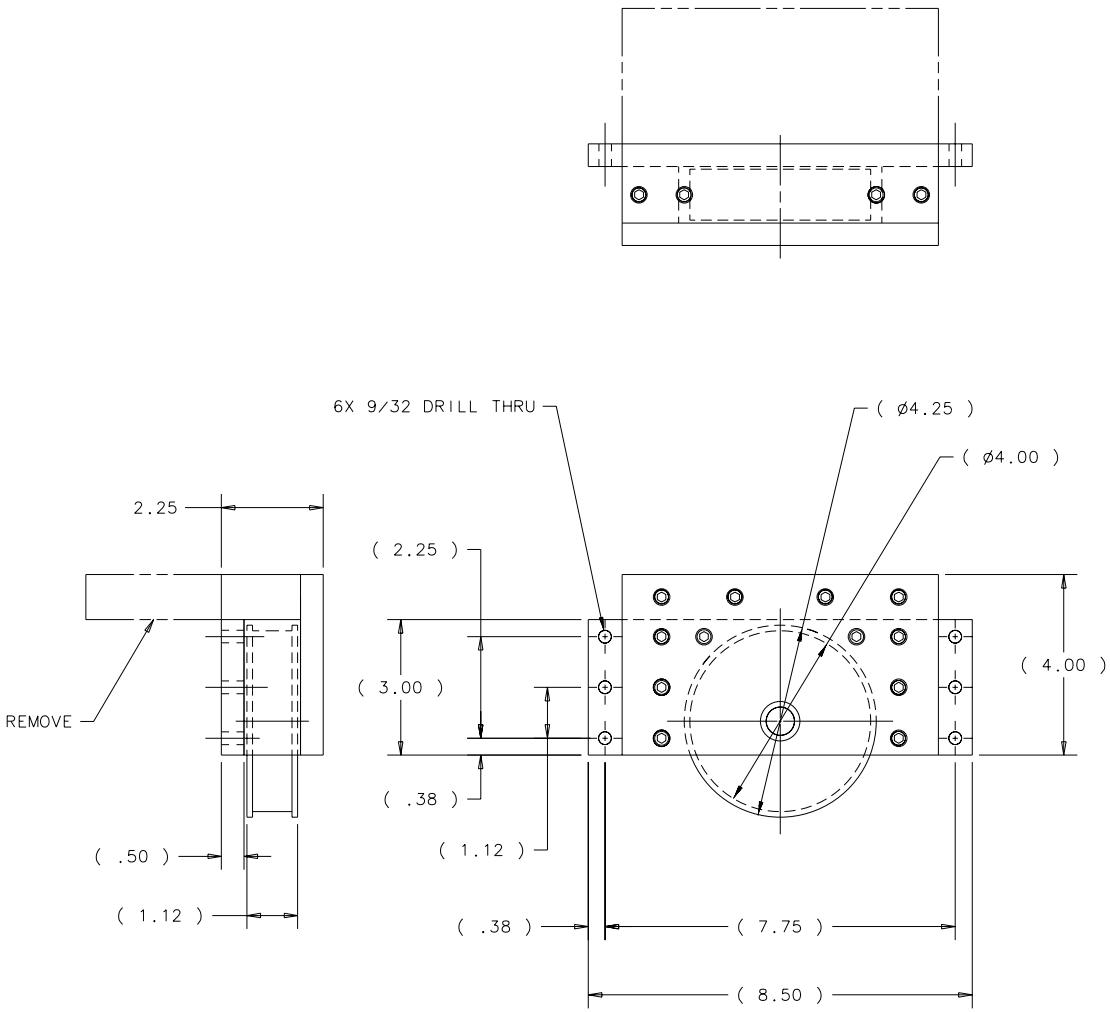

NOTE : TORQUE ALL STAINLESS STEEL BOLTS TO 7 LBS. AFTER IT IS ASSEMBLED.

ITEM	PART NO.	DESCRIPTION OR SIZE	QTY.

PARTS LIST

UNLESS OTHERWISE SPECIFIED			ORIGINATOR	I.FANG	16-SEP-2002
.XX	.XXX	ANGLES	DRAWN	G.SMITH	16-SEP-2002
± .03	± ---	± ---	CHECKED	C.NILA	23-SEP-2002
			APPROVED	I.FANG	23-SEP-2002

1. BREAK ALL SHARP EDGES .015 MAX.
2. DO NOT SCALE DRAWING.
3. DIMENSIONS BASED UPON ANSI Y14.5M-1982
4. ALL DIMENSIONS ARE INCHES
5. MAX. ALL MACH. SURFACES 125

USED ON: ME-421062

MATERIAL: EXISTING WHEEL ASSEMBLY

FERMI NATIONAL ACCELERATOR LABORATORY
UNITED STATES DEPARTMENT OF ENERGY

PPD/MECHANICAL DEPARTMENT
E907 TPC MOVEABLE CART
FLANGED WHEEL ATTACHMENT MOD.

SCALE	DRAWING NUMBER	SHEET	REV
1 : 2	3907.590-MC-421065	1 OF 1	

CREATED WITH : Ideas8m4 | GROUP: PPD/MECHANICAL DEPARTMENT