REV	DESCRIPTION	DRAWN	DATE
		APPROVED	DATE

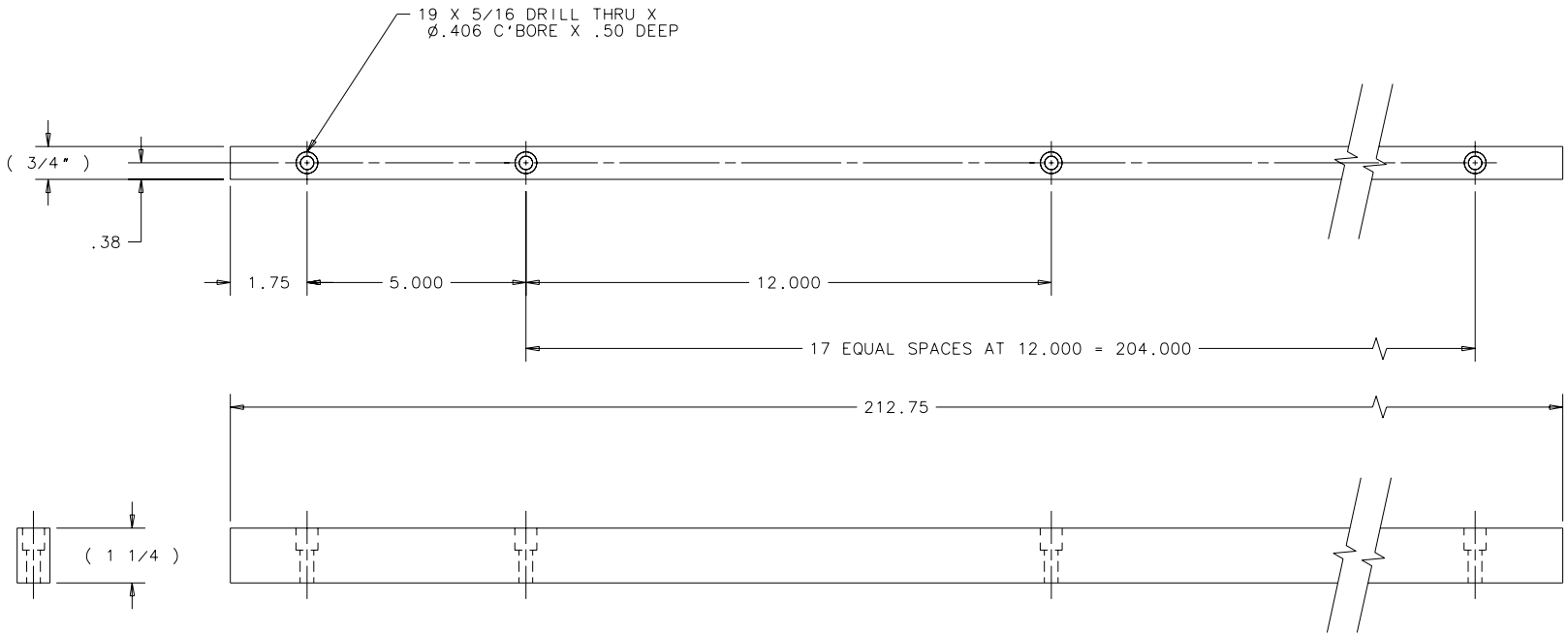

APPROX. WEIGHT = 57 LBS.

ITEM	PART NO.	DESCRIPTION OR SIZE	QTY.

PARTS LIST

UNLESS OTHERWISE SPECIFIED			ORIGINATOR	I.FANG	06-AUG-2002
.XX	.XXX	ANGLES	DRAWN	G.SMITH	06-AUG-2002
± .03	± .010	± ---	CHECKED	I.FANG	19-SEP-2002
			APPROVED	I.FANG	19-SEP-2002

1. BREAK ALL SHARP EDGES .015 MAX.
2. DO NOT SCALE DRAWING.
3. DIMENSIONS BASED UPON ANSI Y14.5M-1982
4. ALL DIMENSIONS ARE INCHES
5. MAX. ALL MACH. SURFACES 125

USED ON: ME-421061

MATERIAL: 304 STAINLESS FLAT

FERMI NATIONAL ACCELERATOR LABORATORY
UNITED STATES DEPARTMENT OF ENERGY

PPD/MECHANICAL DEPARTMENT
E907 TPC/HYDROGEN TARGET
RAIL NARROW-STATIONARY STAND

SCALE	DRAWING NUMBER	SHEET	REV
1 : 2	3907.590-MC-421041	1 OF 1	

CREATED WITH : Ideas8m4 | GROUP: PPD/MECHANICAL DEPARTMENT