| REV | DESCRIPTION | DRAWN | DATE |
|---|---|---|---|
| | | APPROVED | DATE |

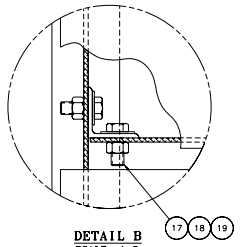


DETAIL B
SCALE :1:2

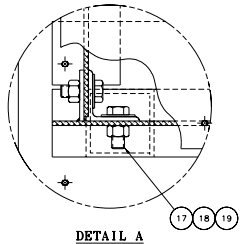


DETAIL A
SCALE :1:2

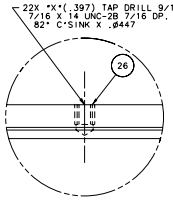


DETAIL C
SCALE :1:1

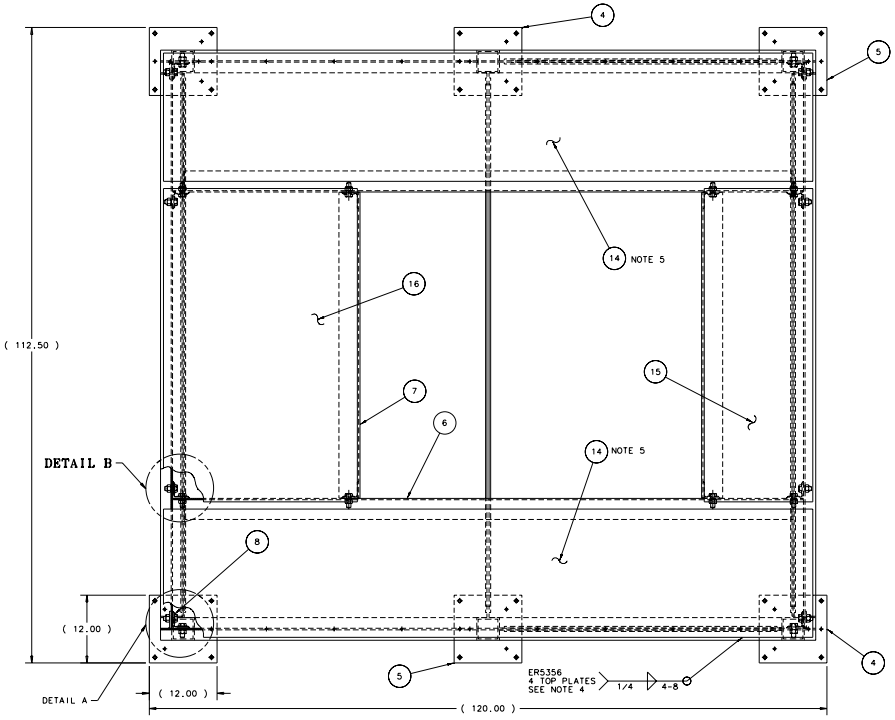


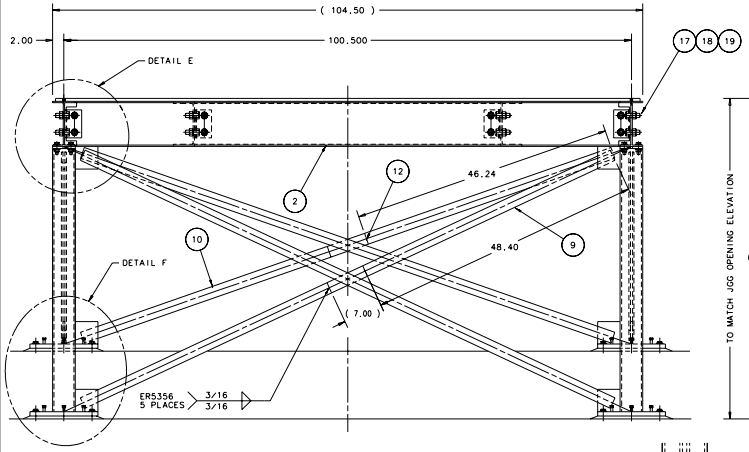


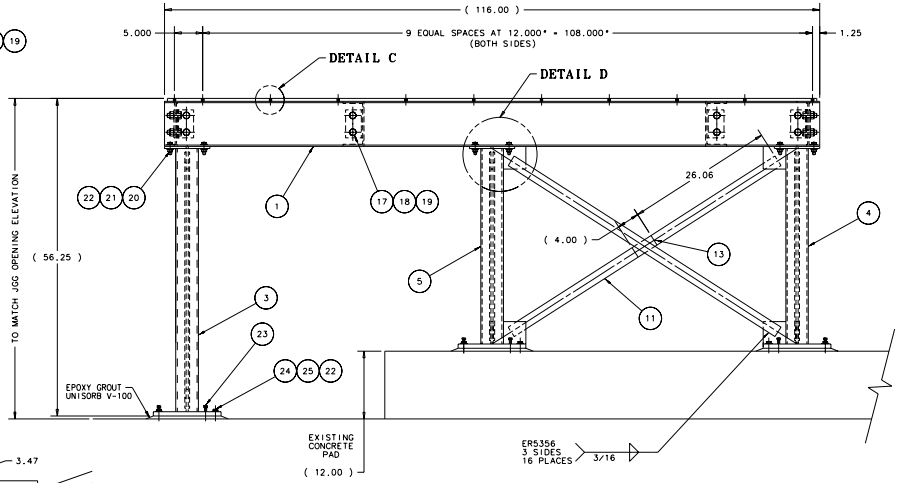


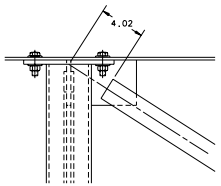


DETAIL D
SCALE :1:4

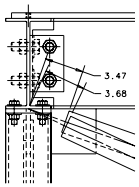


DETAIL E
SCALE :1:4

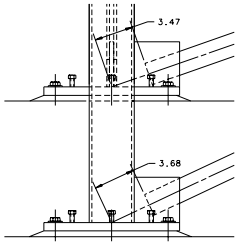


DETAIL F
SCALE :1:4

NOTE :
1. TORQUE ALL 1/2" BOLTS TO 45 FT/LBS.
2. TORQUE ALL 3/4" BOLTS TO 132 FT/LBS.
3. TORQUE ITEM 24 TO 22 FT/LBS.
4. WELD ITEM 14,15 & 16 TO THE FRAME AFTER TIGHTENING ALL CONNECTIONS.
5. DRILL & TAP ITEM 14 UPON COMPLETION OF NOTE 4.

APPROX. WEIGHT = 1,100 LBS.

| ITEM | PART NO. | DESCRIPTION OR SIZE | QTY. |
|---|---|---|---|
| 26 | COML | KEENSERT-HEAVY DUTY INSERT-303 SST KHNL 420-1/4-20 INTERNAL THREAD | 22 |
| 25 | COML | HDI FLUSH MOUNT INTERNAL THREAD ANCHOR HDI-1/2 HILTI #00045754 | 24 |
| 24 | COML | 316 S.S HEX HD. CAP SCREW 1/2-13 UNC-2B X 2" LG. | 24 |
| 23 | COML | 316 S.S HEX HD. CAP SCREW 3/8-16 UNC-2B X 2 1/2" LG. | 18 |
| 22 | COML | 300 SERIES S.S FLAT WASHER FOR 1/2 SCREW | 48 |
| 21 | COML | 316 S.S HEAVY HEX NUT FOR 1/2 SCREW | 24 |
| 20 | COML | 316 S.S HEX HD. CAP SCREW 1/2-13 UNC-2B X 1 3/4" LG. | 24 |
| 19 | COML | 300 SERIES S.S FLAT WASHER FOR 3/4 SCREW | 24 |
| 18 | COML | 316 S.S HEAVY HEX NUT FOR 3/4 SCREW | 24 |
| 17 | COML | 316 S.S HEX HD. CAP SCREW 3/4-10 UNC-2B X 2" LG. | 24 |
| 16 | COML | ALUM. PLATE 6061-T6511 1/2 X 34 3/8 X 55.50" LG. | 1 |
| 15 | COML | ALUM. PLATE 6061-T6511 1/2 X 19 1/4 X 55.50" LG. | 1 |
| 14 | COML | ALUM. PLATE 6061-T6511 1/2 X 22 3/4 X 115.00" LG. | 2 |
| 13 | COML | ALUM. BAR 3/8 X 2 X 4.00" LG. | 2 |
| 12 | COML | ALUM. BAR 3/8 X 2 X 7.00" LG. | 3 |
| 11 | COML | ALUM. BAR 1/4 X 2 X 56.11" LG. | 4 |
| 10 | COML | ALUM. BAR 1/4 X 2 X 99.49" LG. | 4 |
| 9 | COML | ALUM. BAR 1/4 X 2 X 103.57" LG. | 2 |
| 8 | MC-421035 | BEAM CONNECTING ANGLE | 8 |
| 7 | MC-421033 | HORIZ. CHANNEL SHORT | 6 |
| 6 | MC-421032 | HORIZ. CHANNEL LONG | 2 |
| 5 | MC-421031 | VERT COLUMN SHORT-OPPISITE | 2 |
| 4 | MC-421030 | VERT COLUMN SHORT | 2 |
| 3 | MC-421029 | VERT COLUMN LONG | 2 |
| 2 | MD-421028 | HORIZ. BEAM SHORT | 2 |
| 1 | MD-421027 | HORIZ. BEAM LONG | 2 |

PARTS LIST

| UNLESS OTHERWISE SPECIFIED | | | ORIGINATOR | I.FANG | 17-JUL-2002 |
|---|---|---|---|---|---|
| .XX | .XXX | ANGLES | DRAWN | G.SMITH | 17-JUL-2002 |
| ± .03 | ± --- | ± --- | CHECKED | | |

1. BREAK ALL SHARP EDGES .125 R MAX.
2. DO NOT SCALE DRAWING.
3. DIMENSIONS BASED UPON ANSI Y14.5M-1982.
4. ALL DIMENSIONS ARE INCHES
5. MAX. ALL MACH. SURFACES 125

APPROVED
USED ON
MATERIAL: SEE PARTS LIST ABOVE

**FERMI NATIONAL ACCELERATOR LABORATORY**
UNITED STATES DEPARTMENT OF ENERGY

PPD/MECHANICAL DEPARTMENT
E907 TPC/HYDROGEN TARGET
STATIONARY STAND ASSY

| SCALE | DRAWING NUMBER | SHEET | REV |
|---|---|---|---|
| 1 : 8 | 3907.590-ME-421026 | 1 OF 1 | |

CREATED WITH : Ideas8m4 GROUP: PPD/MECHANICAL DEPARTMENT

Plotted by gsmith on 10-Sep-02 , File: TPC_STATIONARY_STAND_ASSY1.prf