REV	DESCRIPTION	DRAWN	DATE
		APPROVED	DATE

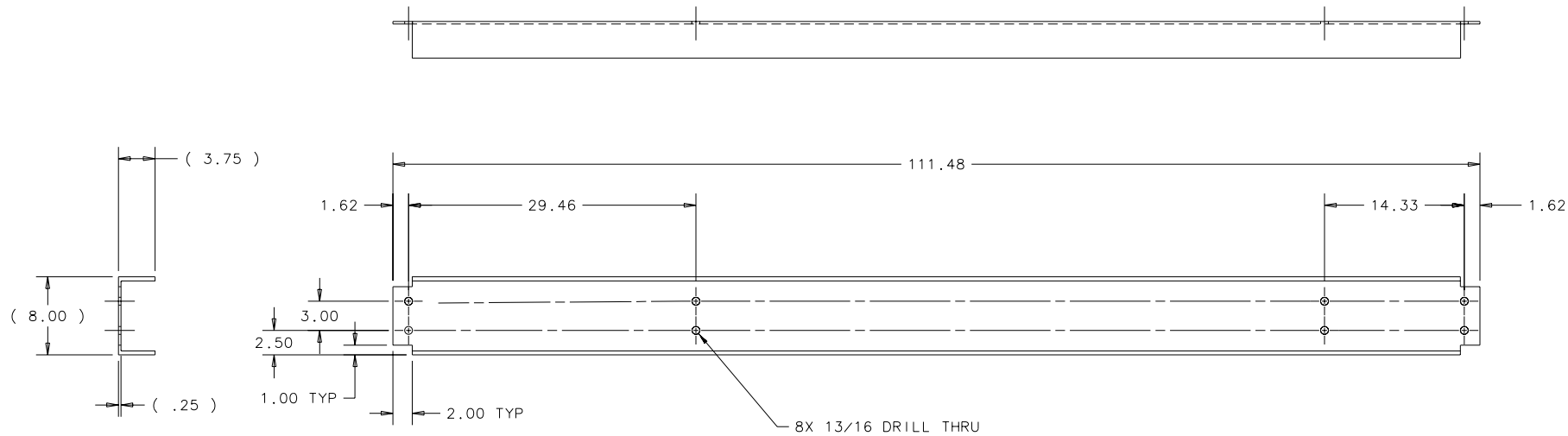

ITEM	PART NO.	DESCRIPTION OR SIZE	QTY.

PARTS LIST

UNLESS OTHERWISE SPECIFIED			ORIGINATOR	I.FANG	17-JUL-2002
.XX	.XXX	ANGLES	DRAWN	G.SMITH	17-JUL-2002
± .03	± ---	± ---	CHECKED	C.NILA	17-SEP-2002
			APPROVED	I.FANG	17-SEP-2002

1. BREAK ALL SHARP EDGES .015 MAX.
2. DO NOT SCALE DRAWING.
3. DIMENSIONS BASED UPON ANSI Y14.5M-1982
4. ALL DIMENSIONS ARE INCHES
5. MAX. ALL MACH. SURFACES 125

USED ON: ME-421026

MATERIAL: ALUMINUM CHANNEL 6061-T6 C8 X .25 X 5.79 LBS/FT.

FERMI NATIONAL ACCELERATOR LABORATORY
UNITED STATES DEPARTMENT OF ENERGY

PPD/MECHANICAL DEPARTMENT
E907 TPC/HYDROGEN TARGET
HORZ CHANNEL LG-STATIONARY STAND

SCALE	DRAWING NUMBER	SHEET	REV
1 : 8	3907.590-MC-421032	1 OF 1	

CREATED WITH : Ideas8m4 | GROUP: PPD/MECHANICAL DEPARTMENT