REV	DESCRIPTION	DRAWN	DATE
		APPROVED	DATE

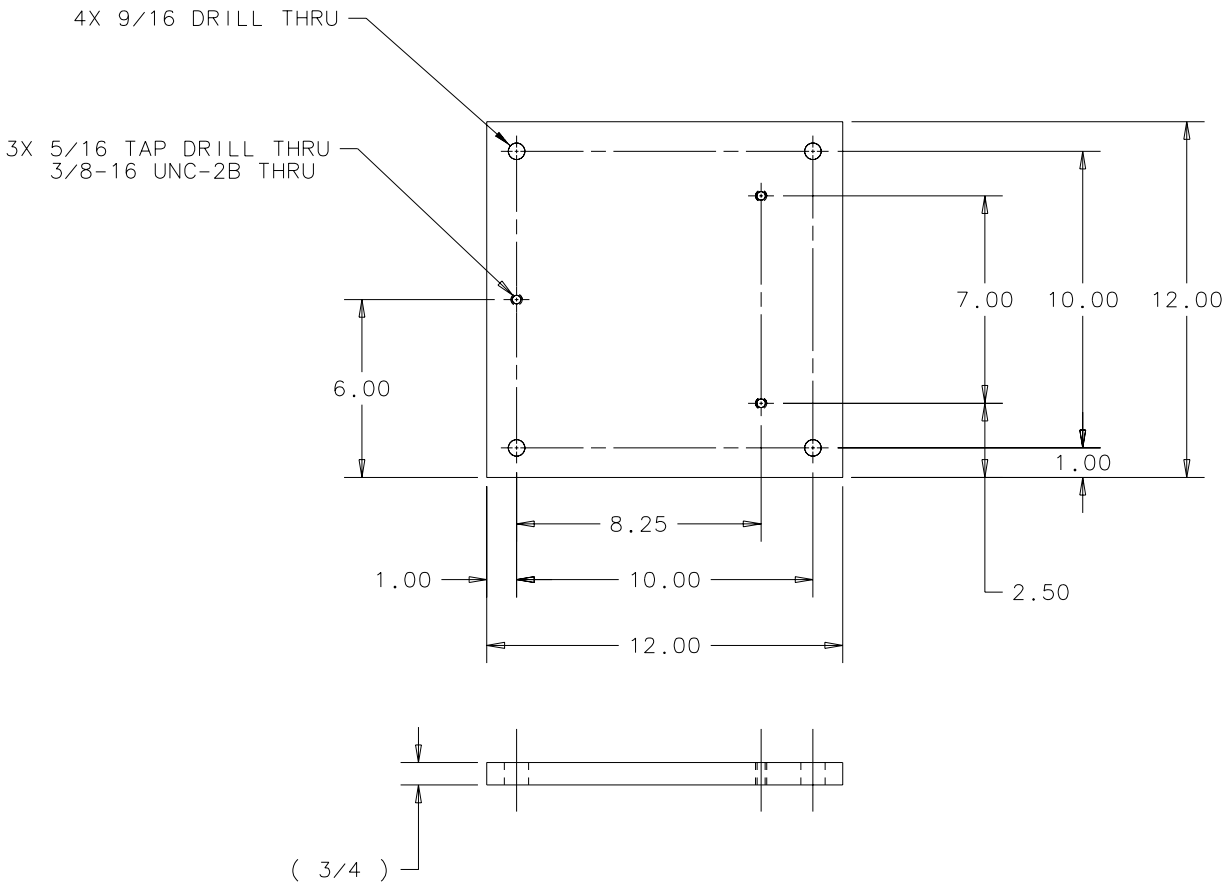

ITEM	PART NO.	DESCRIPTION OR SIZE	QTY.

PARTS LIST

UNLESS OTHERWISE SPECIFIED			ORIGINATOR	I.FANG	17-JUL-2002
.XX	.XXX	ANGLES	DRAWN	G.SMITH	17-JUL-2002
± .03	± ---	± ---	CHECKED	C.NILA	17-SEP-2002
			APPROVED	I.FANG	17-SEP-2002

1. BREAK ALL SHARP EDGES .015 MAX.
2. DO NOT SCALE DRAWING.
3. DIMENSIONS BASED UPON ANSI Y14.5M-1982
4. ALL DIMENSIONS ARE INCHES
5. MAX. ALL MACH. SURFACES 125

USED ON
MC-421029;MC-421030;MC-421031

MATERIAL
ALUMINUM PLATE 6061-T6
3/4 THICK

FERMI NATIONAL ACCELERATOR LABORATORY
UNITED STATES DEPARTMENT OF ENERGY

PPD/MECHANICAL DEPARTMENT
E907 TPC/HYDROGEN TARGET
BASE PLATE-STATIONARY STAND

SCALE	DRAWING NUMBER	SHEET	REV
1 : 4	3907.590-MB-421034	1 OF 1	

CREATED WITH : Ideas8m4 | GROUP: PPD/MECHANICAL DEPARTMENT