REV	DESCRIPTION	DRAWN	DATE
		APPROVED	DATE

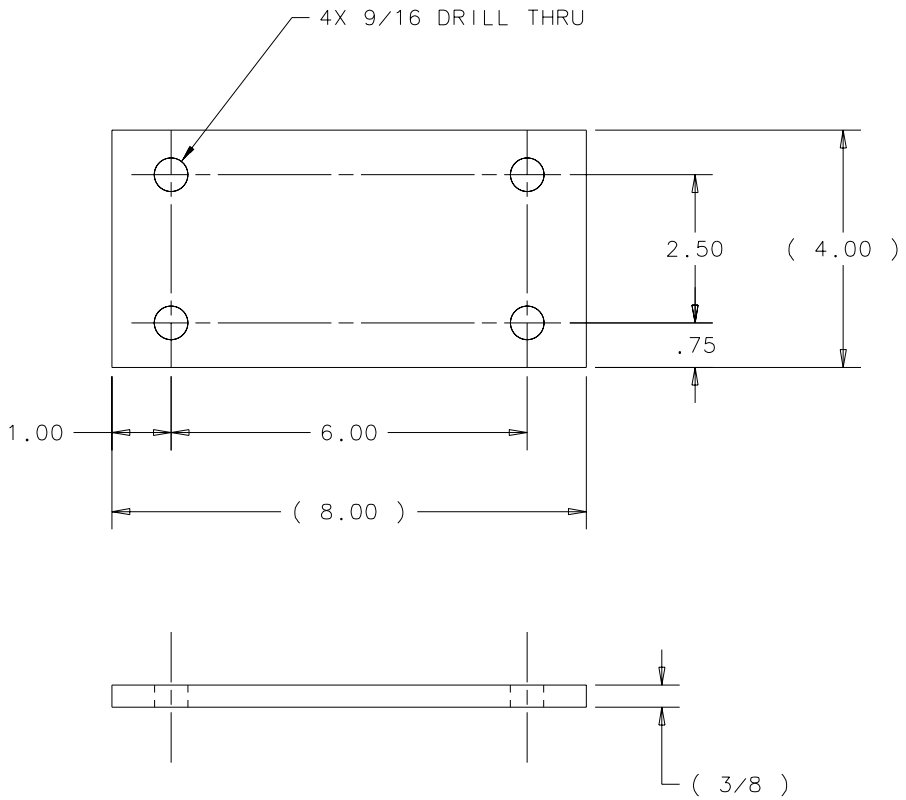

ITEM	PART NO.	DESCRIPTION OR SIZE	QTY.
PARTS LIST			

UNLESS OTHERWISE SPECIFIED			ORIGINATOR	I.FANG	17-JUL-2002
.XX	.XXX	ANGLES	DRAWN	G.SMITH	17-JUL-2002
± .03	± ---	± ---	CHECKED	C.NILA	17-SEP-2002
			APPROVED	I.FANG	17-SEP-2002

1. BREAK ALL SHARP EDGES .015 MAX.
2. DO NOT SCALE DRAWING.
3. DIMENSIONS BASED UPON ANSI Y14.5M-1982
4. ALL DIMENSIONS ARE INCHES
5. MAX. ALL MACH. SURFACES 125 √

USED ON
MC-421029
MC-421030 ;MC-421031

MATERIAL
ALUMINUM PLATE 6061-T6
3/8 X 4 X 8.00 LG.

FERMI NATIONAL ACCELERATOR LABORATORY
UNITED STATES DEPARTMENT OF ENERGY

PPD/MECHANICAL DEPARTMENT
E907 TPC/HYDROGEN TARGET
TOP PLATE-VERT COLUMN-STAT.STAND

SCALE	DRAWING NUMBER	SHEET	REV
1 : 2	3907.590-MB-421037	1 OF 1	

CREATED WITH : Ideas8m4 | GROUP: PPD/MECHANICAL DEPARTMENT