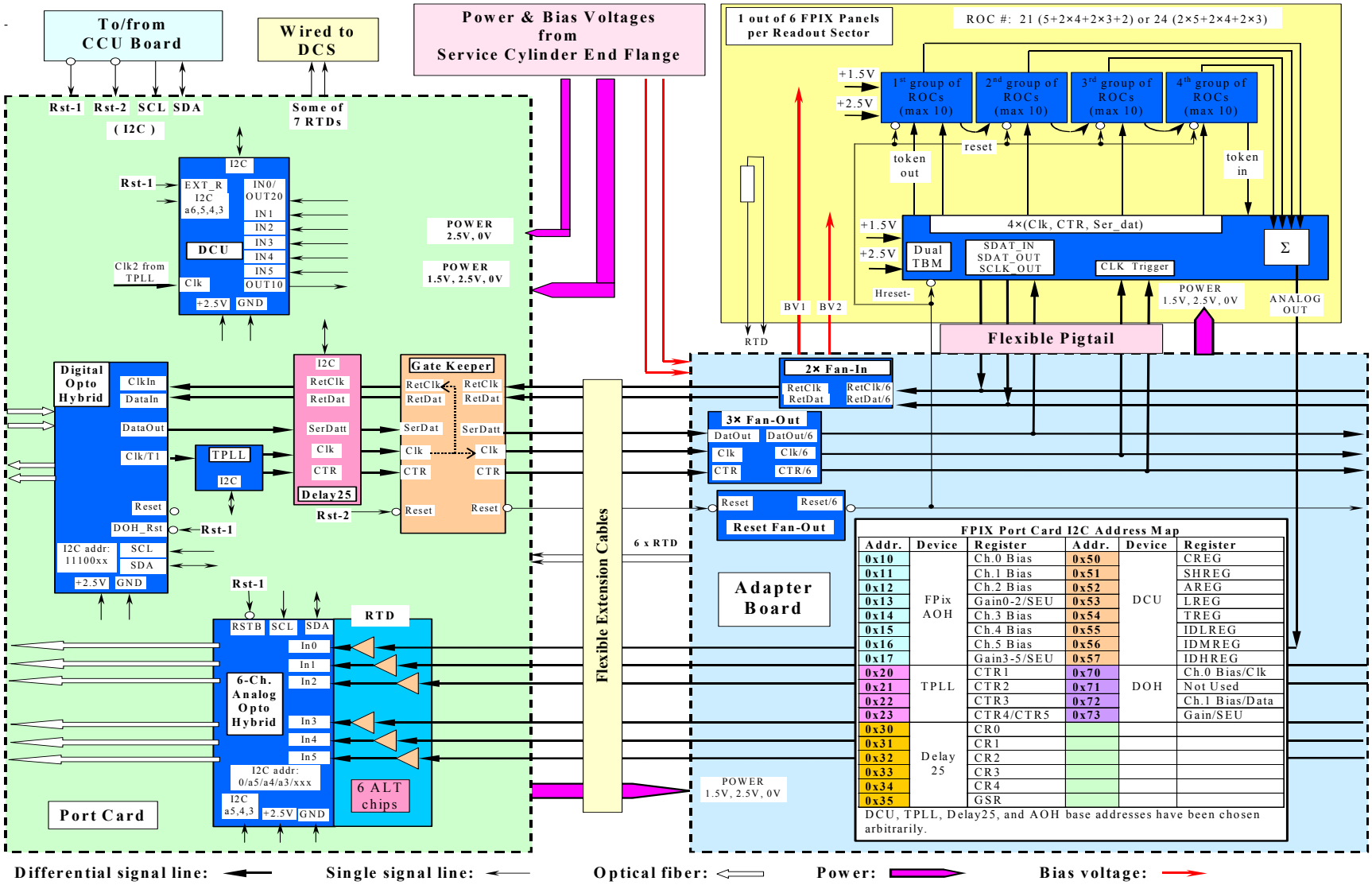

FPIX Port Card I2C Address Map

Addr.	Device	Register	Addr.	Device	Register
0x10	FPix AOH	Ch.0 Bias	0x50	DCU	CREG
0x11		Ch.1 Bias	0x51		SHREG
0x12		Ch.2 Bias	0x52		AREG
0x13		Gain0-2/SEU	0x53		LREG
0x14		Ch.3 Bias	0x54		TREG
0x15		Ch.4 Bias	0x55		IDLREG
0x16		Ch.5 Bias	0x56		IDMREG
0x17		Gain3-5/SEU	0x57		IDHREG
0x20	TPLL	CTR1	0x70	DOH	Ch.0 Bias/Clk
0x21		CTR2	0x71		Not Used
0x22		CTR3	0x72		Ch.1 Bias/Data
0x23		CTR4/CTR5	0x73		Gain/SEU
0x30	Delay 25	CR0			
0x31		CR1			
0x32		CR2			
0x33		CR3			
0x34		CR4			
0x35		GSR			

DCU, TPLL, Delay25, and AOH base addresses have been chosen arbitrarily.