# System Overview and Deliverables

**FPix (baseline):**

US delivers 4 'disks'

TBM (Token Bit Manager)

- Mechanical support with insertion/extraction system, and cooling
- Pixel Sensors
- All the required electronics designed by us, except the ROC, FED, FEC and OL designed by collaborators

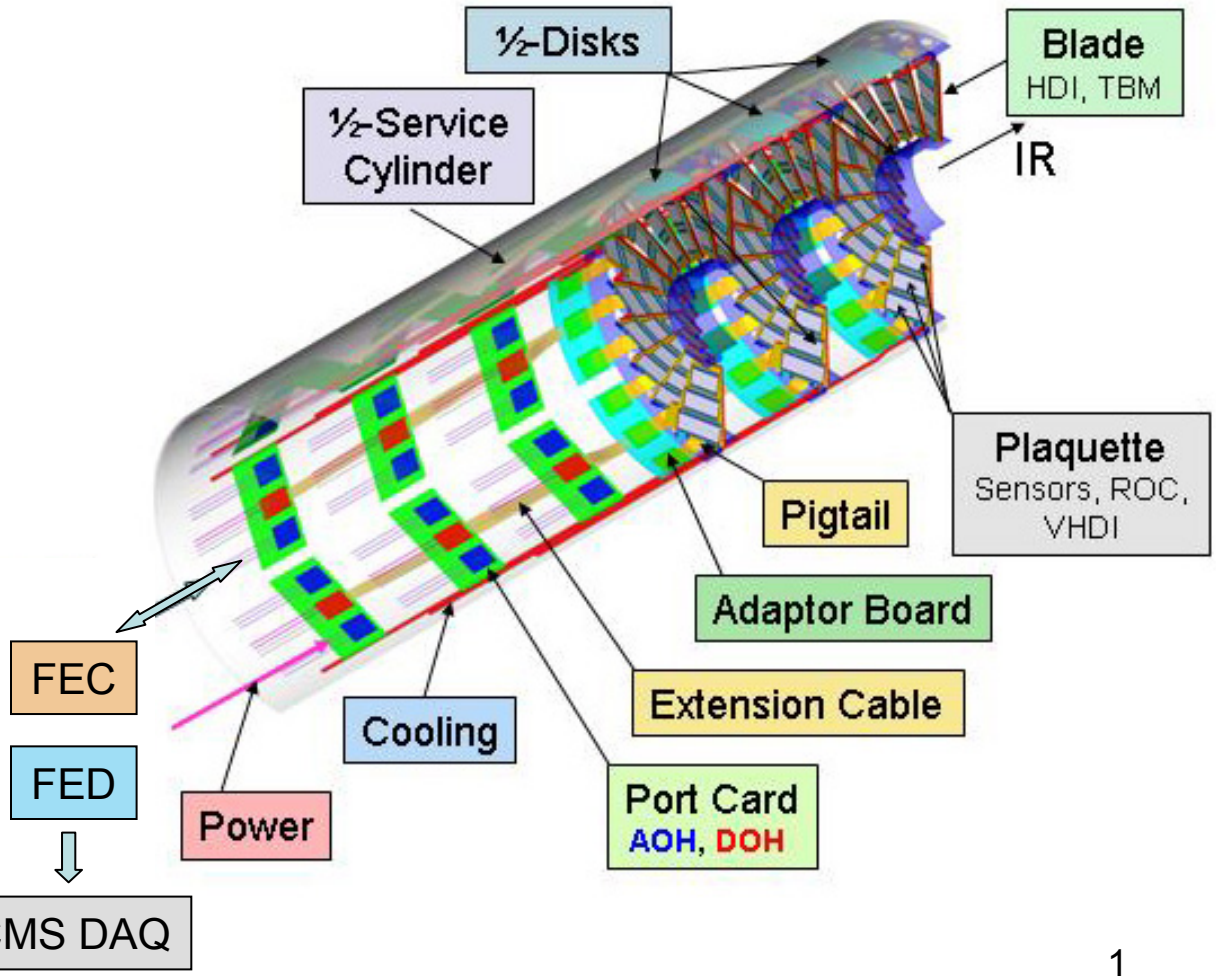

# Geometry CMS Forward Pixel

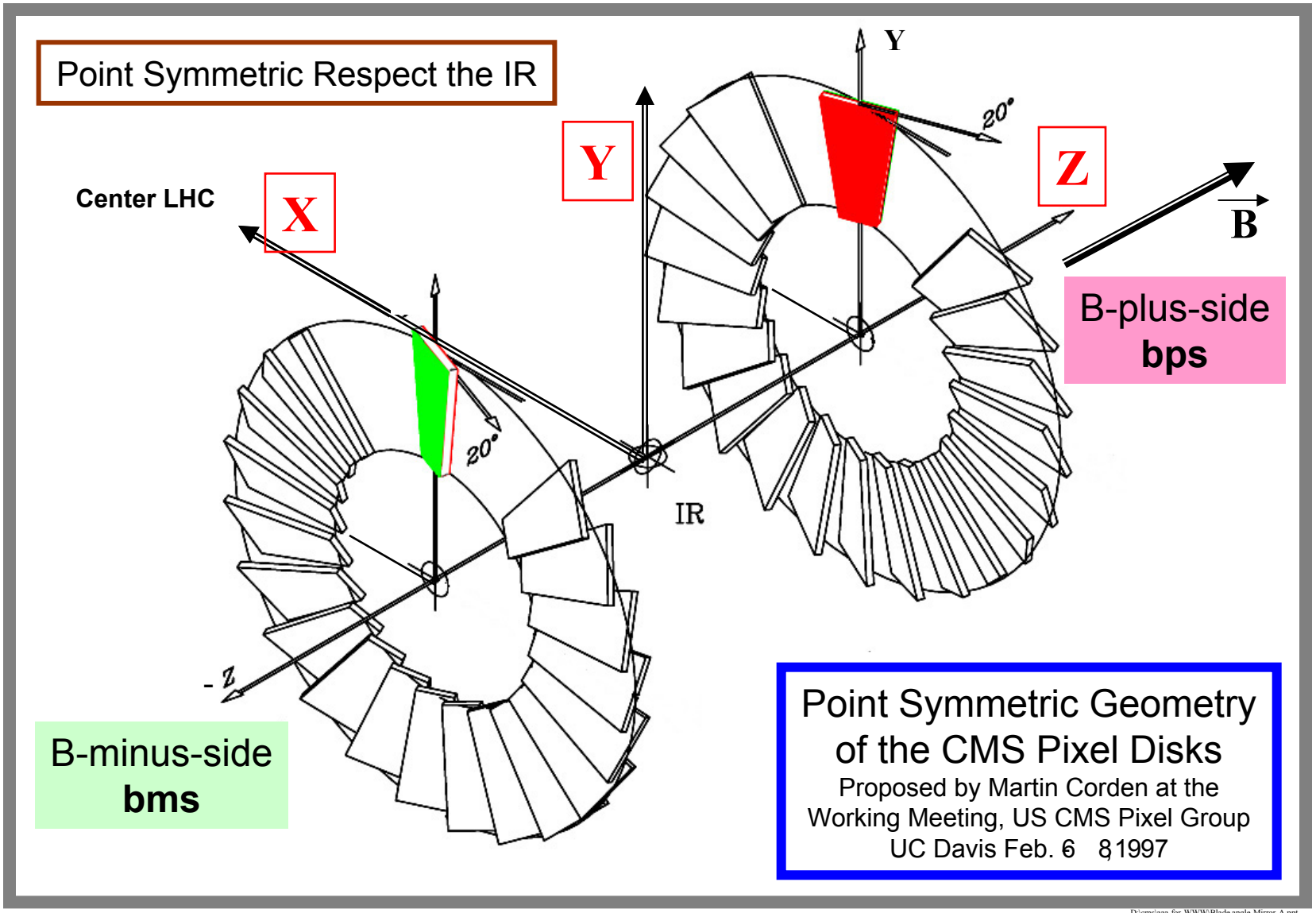


D:\cms\aaa-for-WWW\Blade angle-Mirror-A.ppt

# Pixels Layout as per TDR

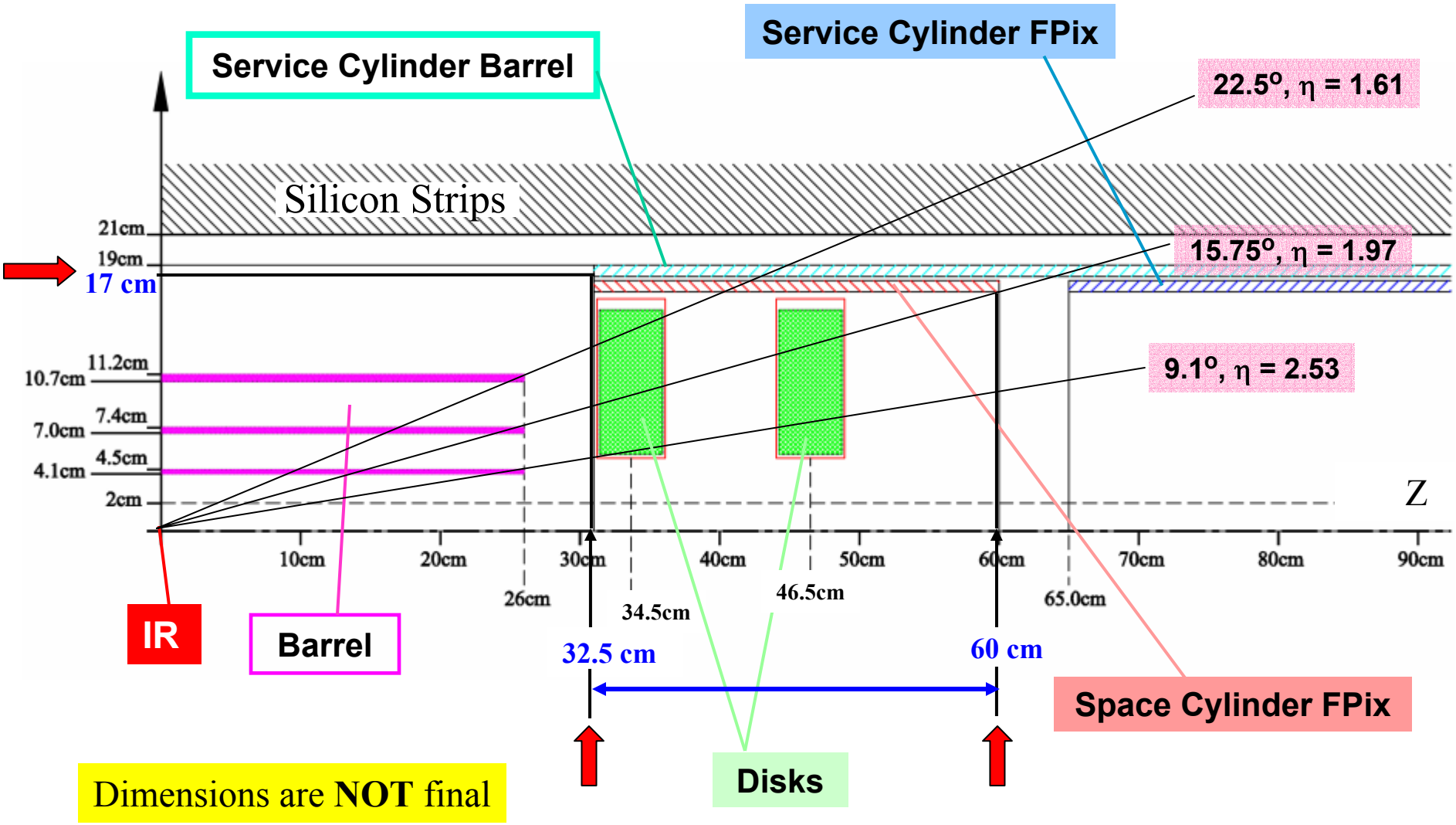


Dimensions are **NOT** final

# ½-Disk-A (For + side of IR)

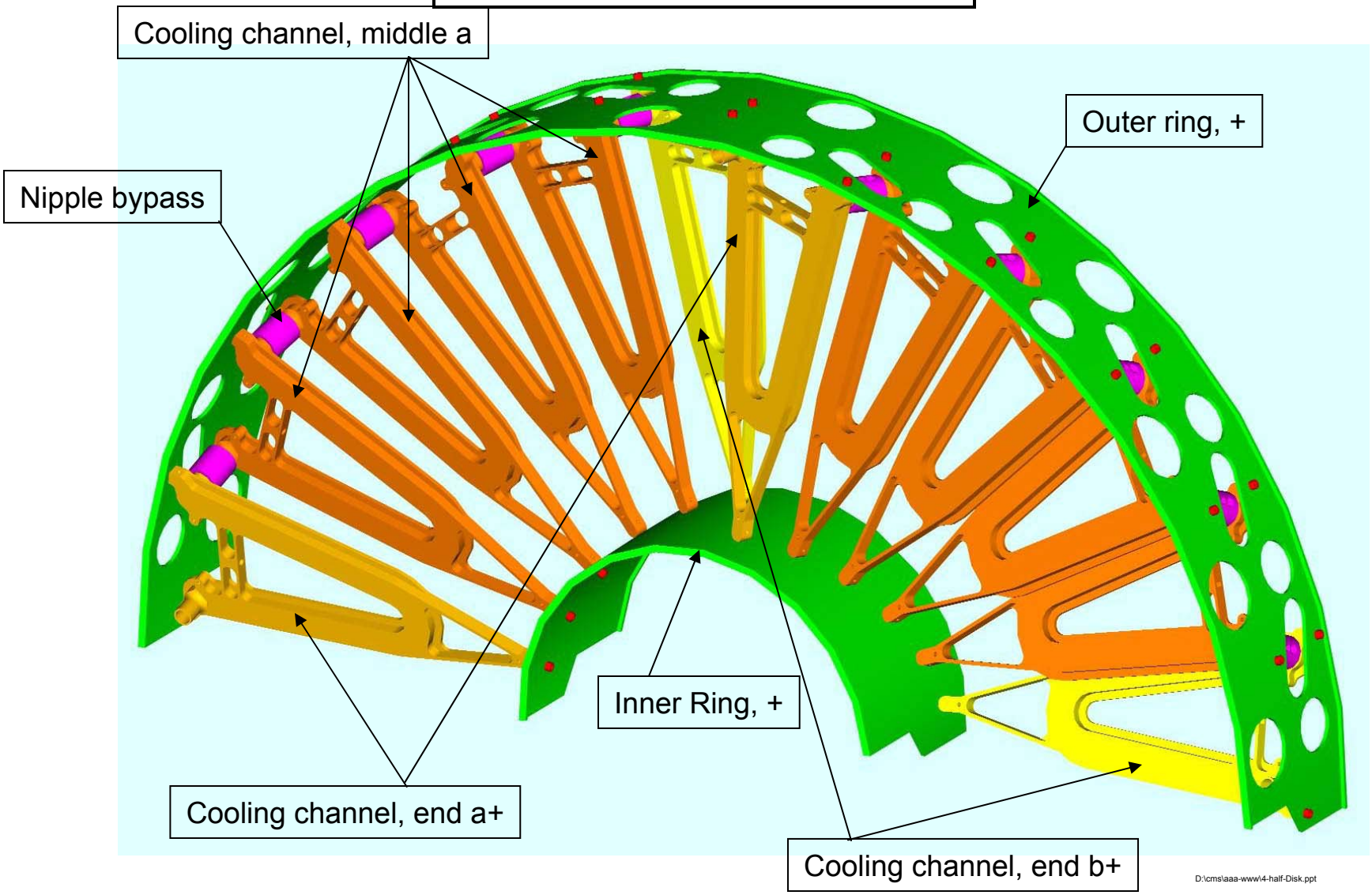

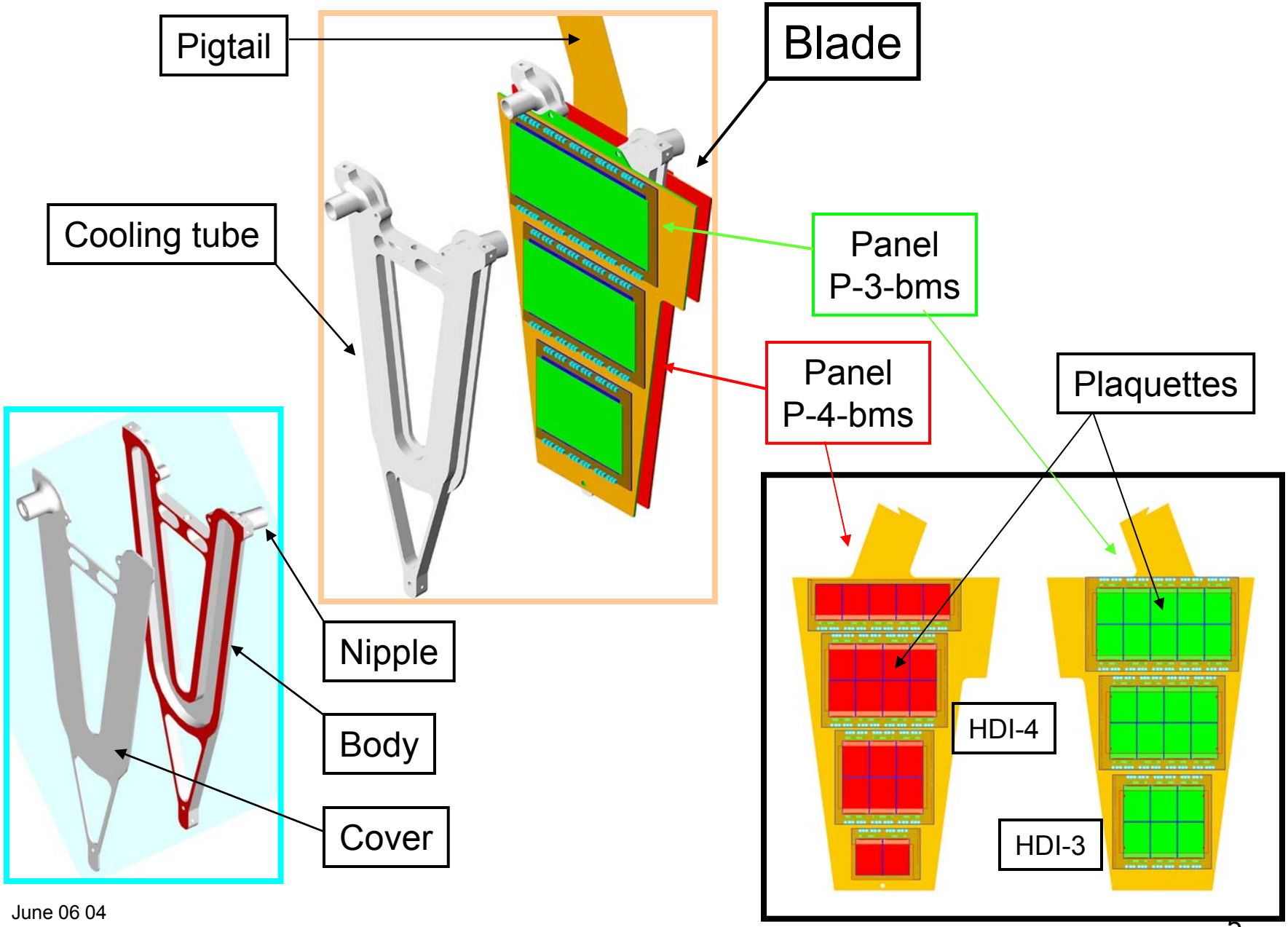
Pigtail
Blade
Cooling tube
Panel
P-3-bms
Panel
P-4-bms
Plaquettes
Nipple
Body
Cover
HDI-4
HDI-3

# Components US CMS FPix

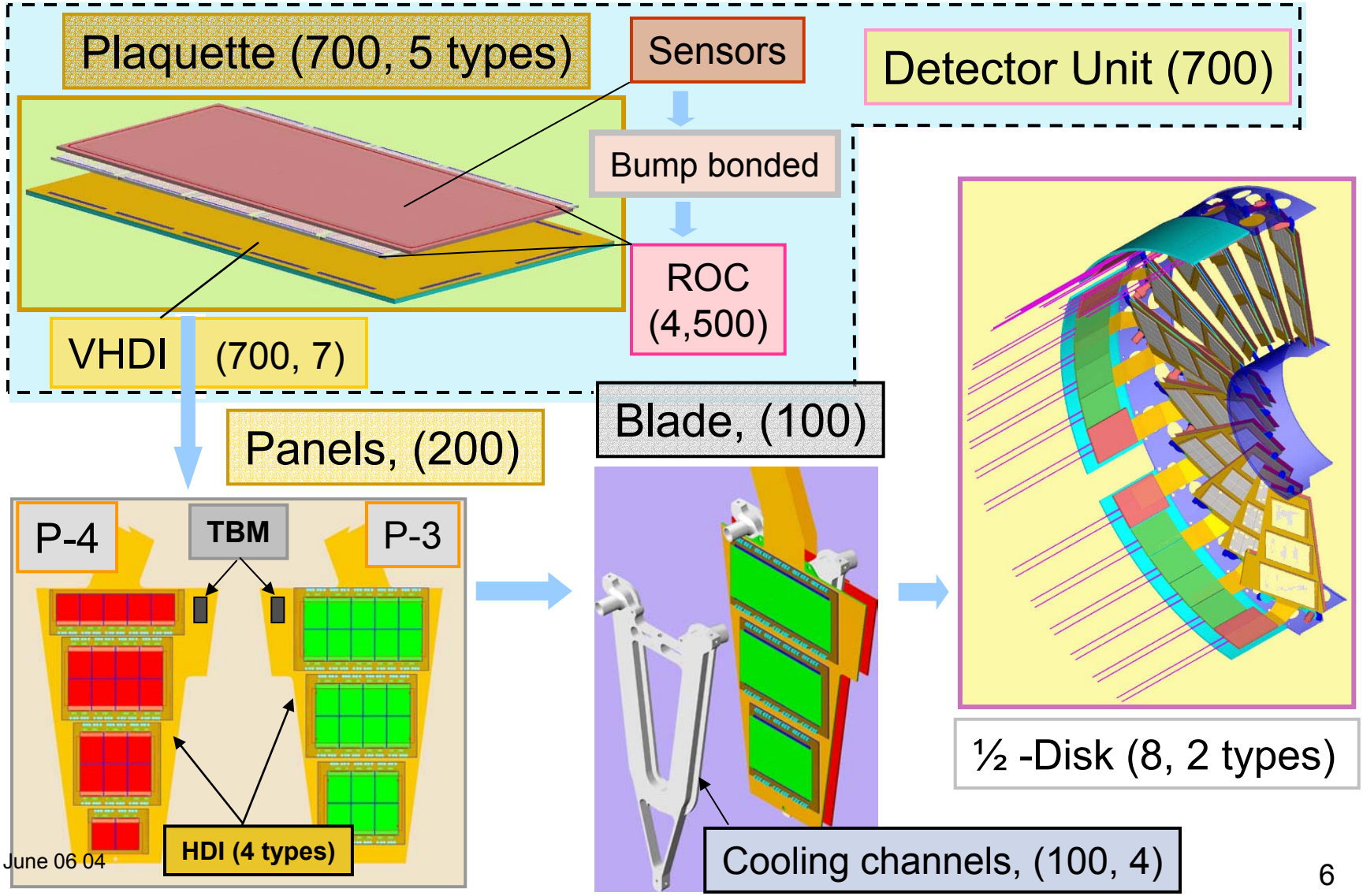

# Assembly

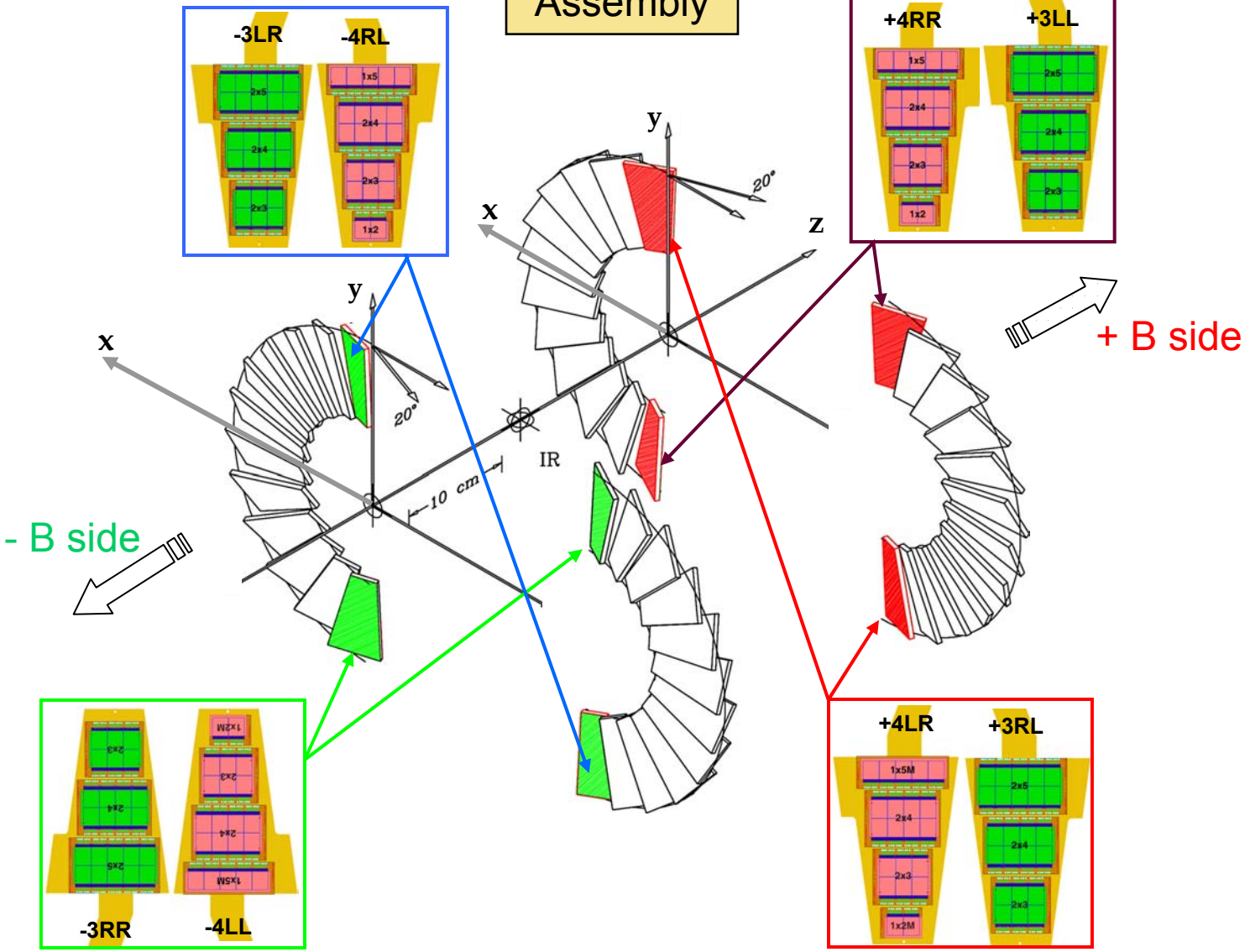


# Different Panels Needed

# High Density Interconnects: VHDI, HDI

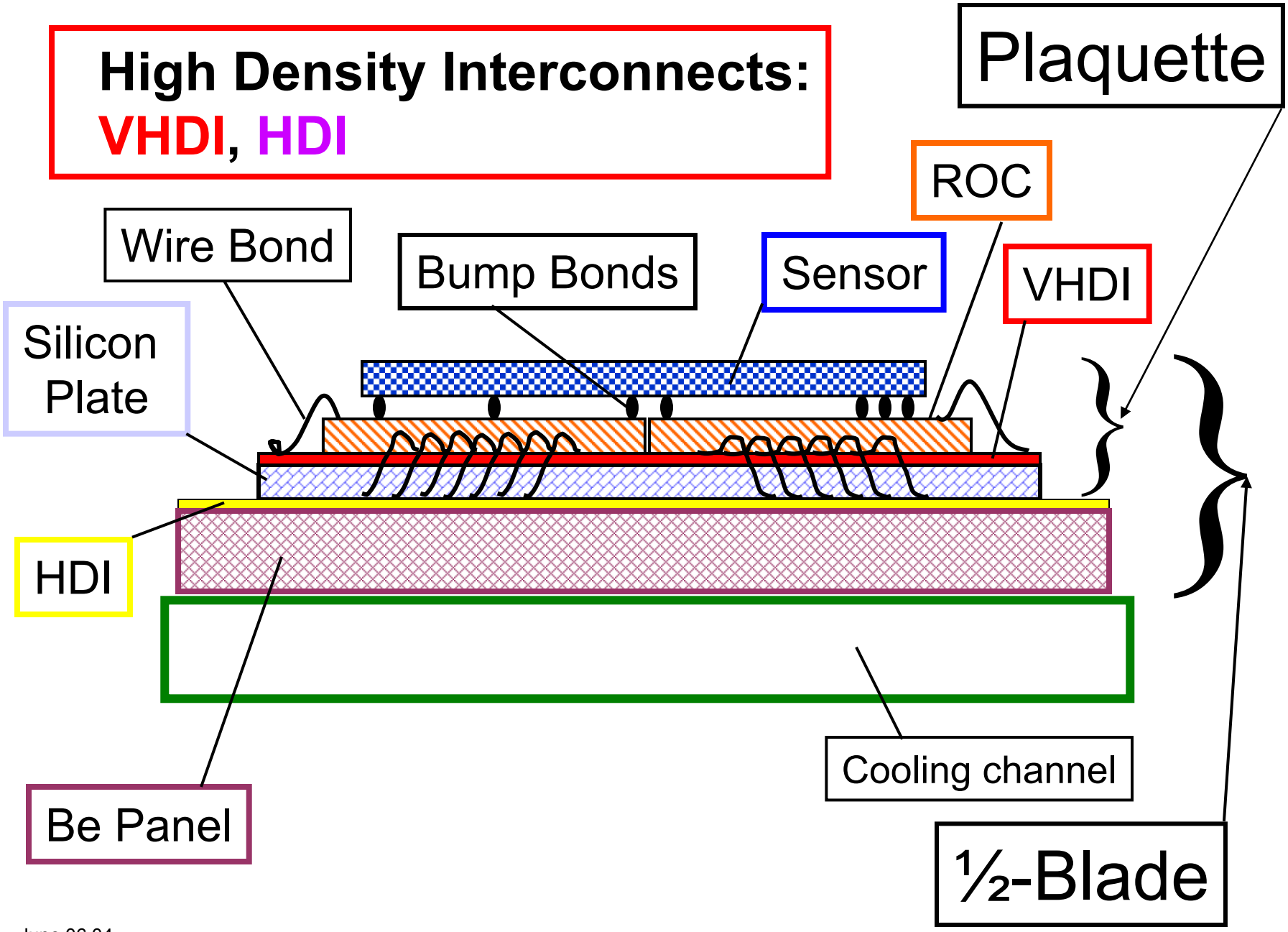

# Components of the Panels

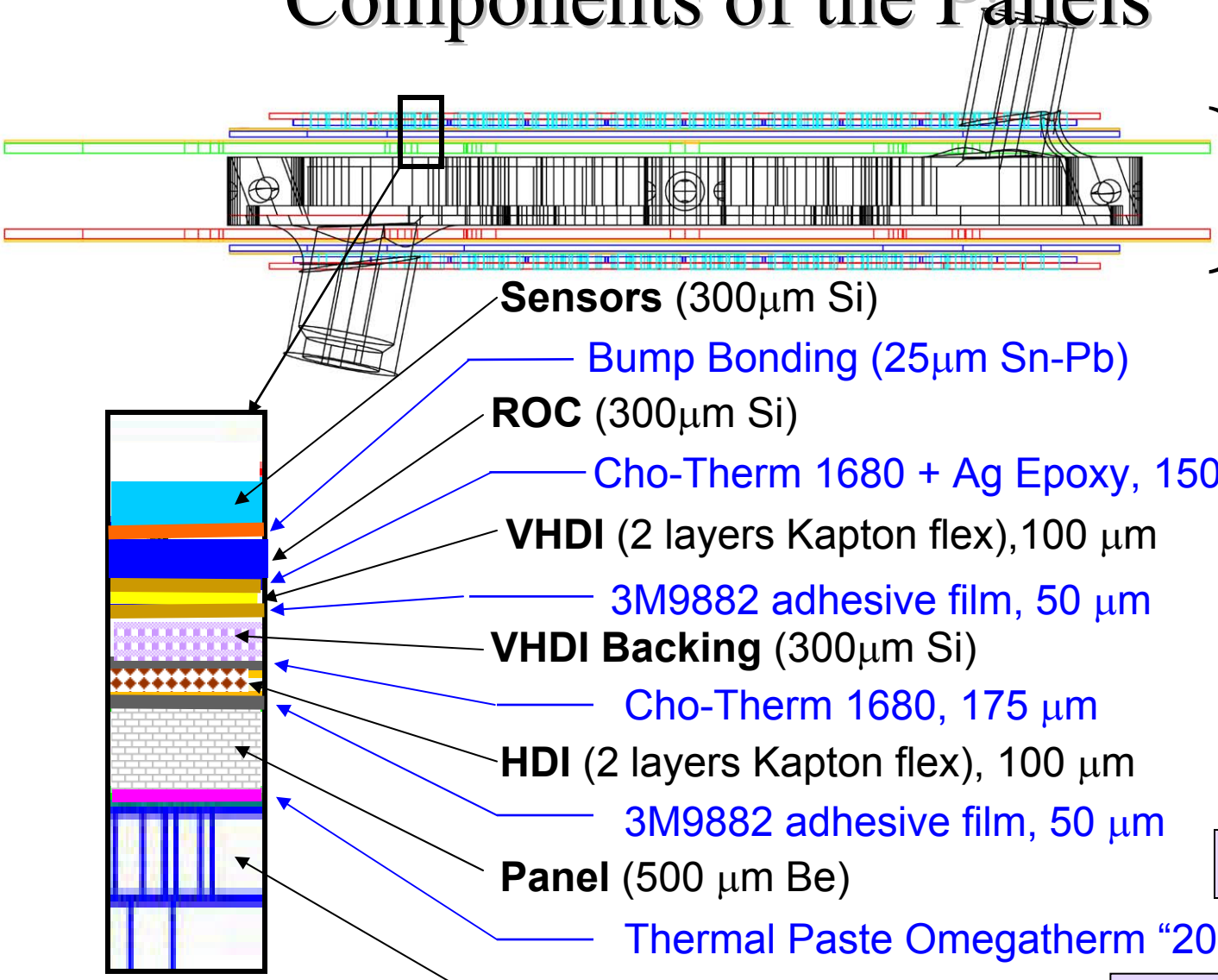


12 layers

Tot 2.25mm

# FPix: Mechanics

Disks

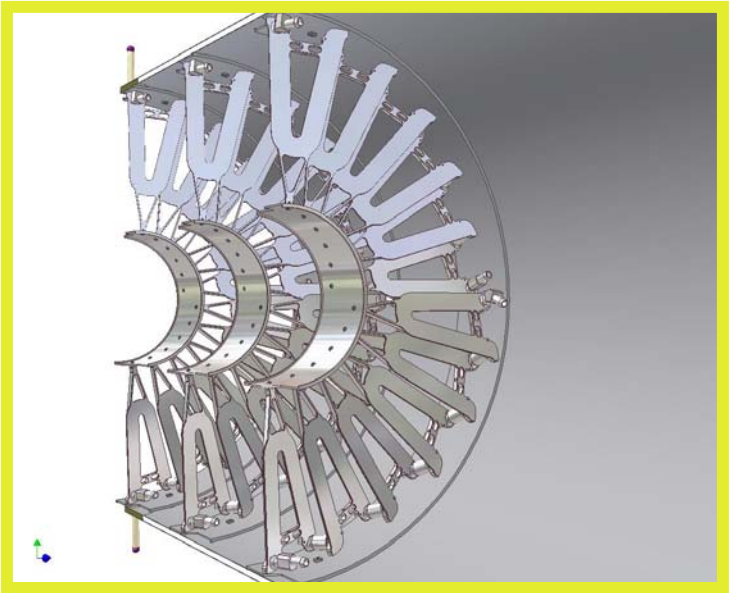

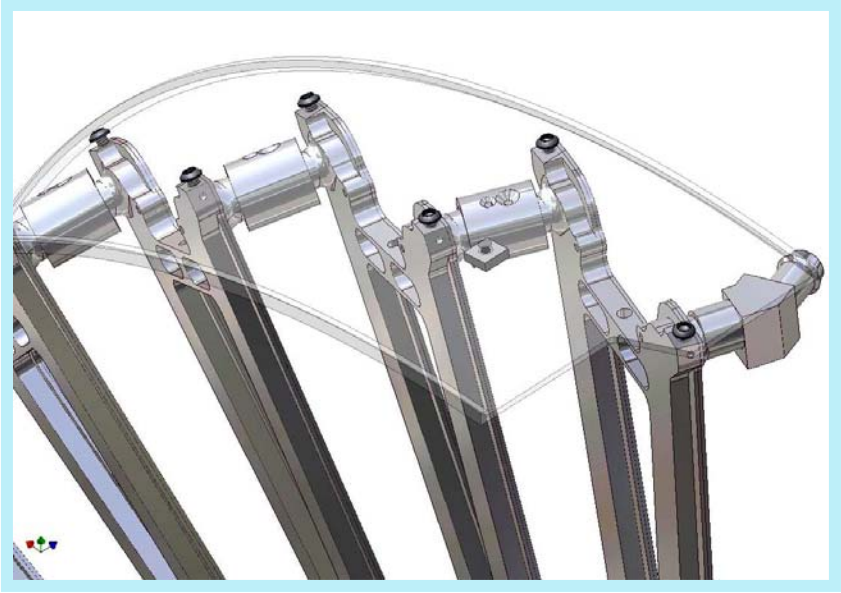

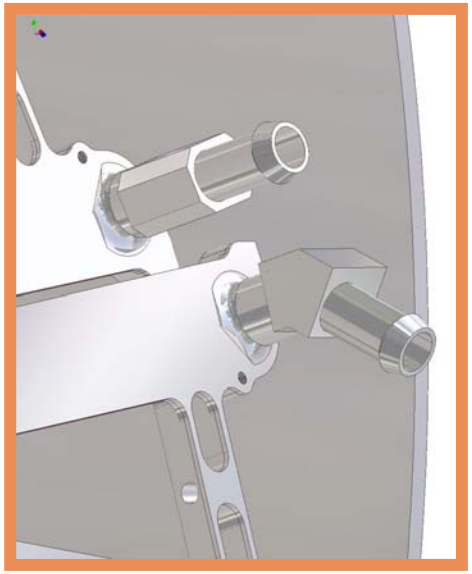

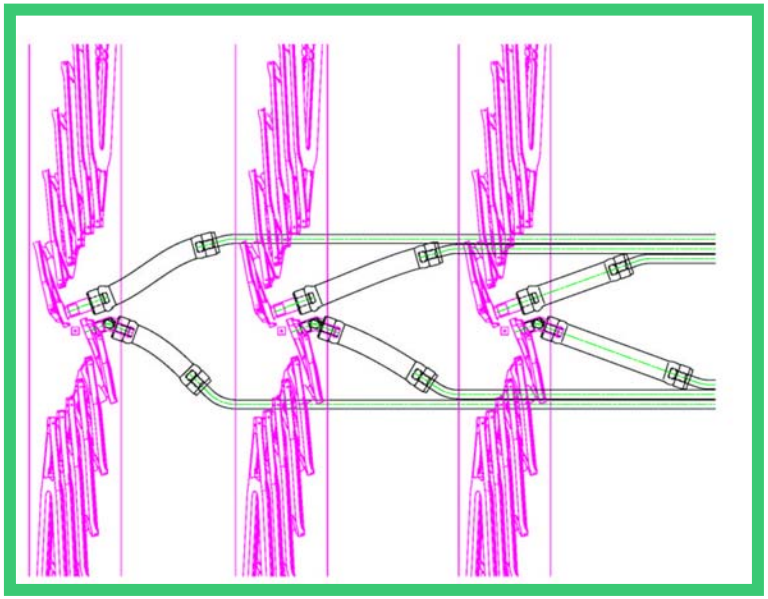

# FPix: Mechanics

## Service Cylinder

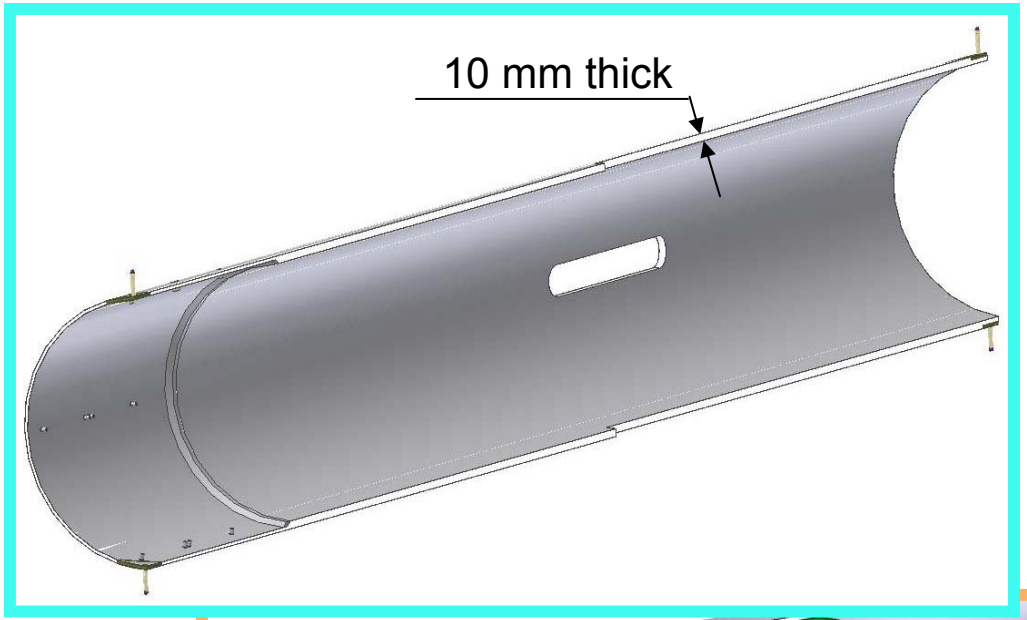

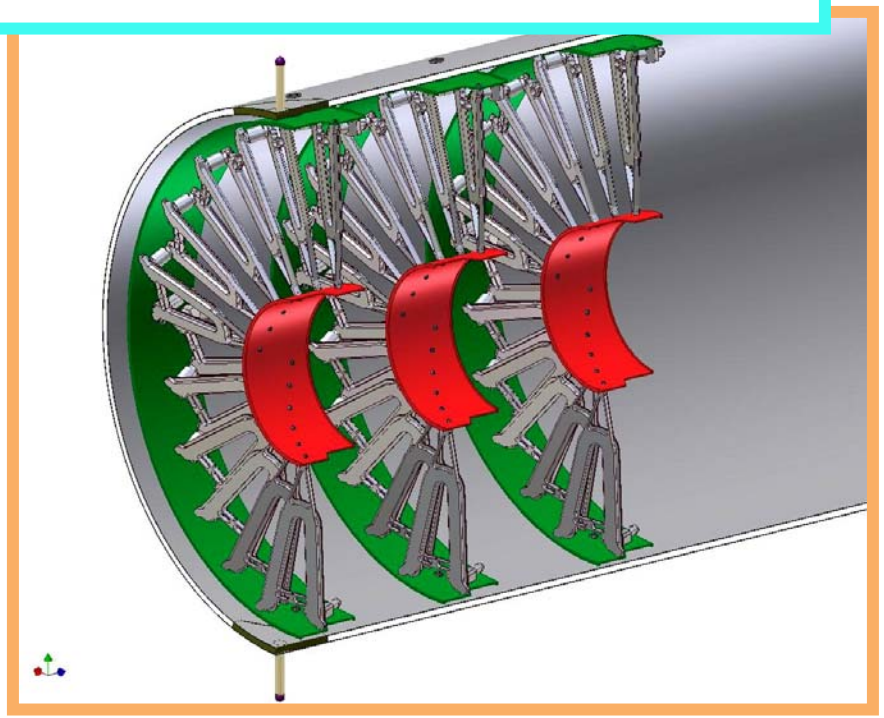

# Installation. PSI CERN

- Pixel are installed only after the beam has circulated.
- Both pixel's barrel and disks are inserted along rails.
- The installation will take only a few weeks.
- The pixel detectors will be accessible only when extracted.
- We expect this to be possible at least once a year.
    - Expect to replace Detectors every 2 to 3 years.

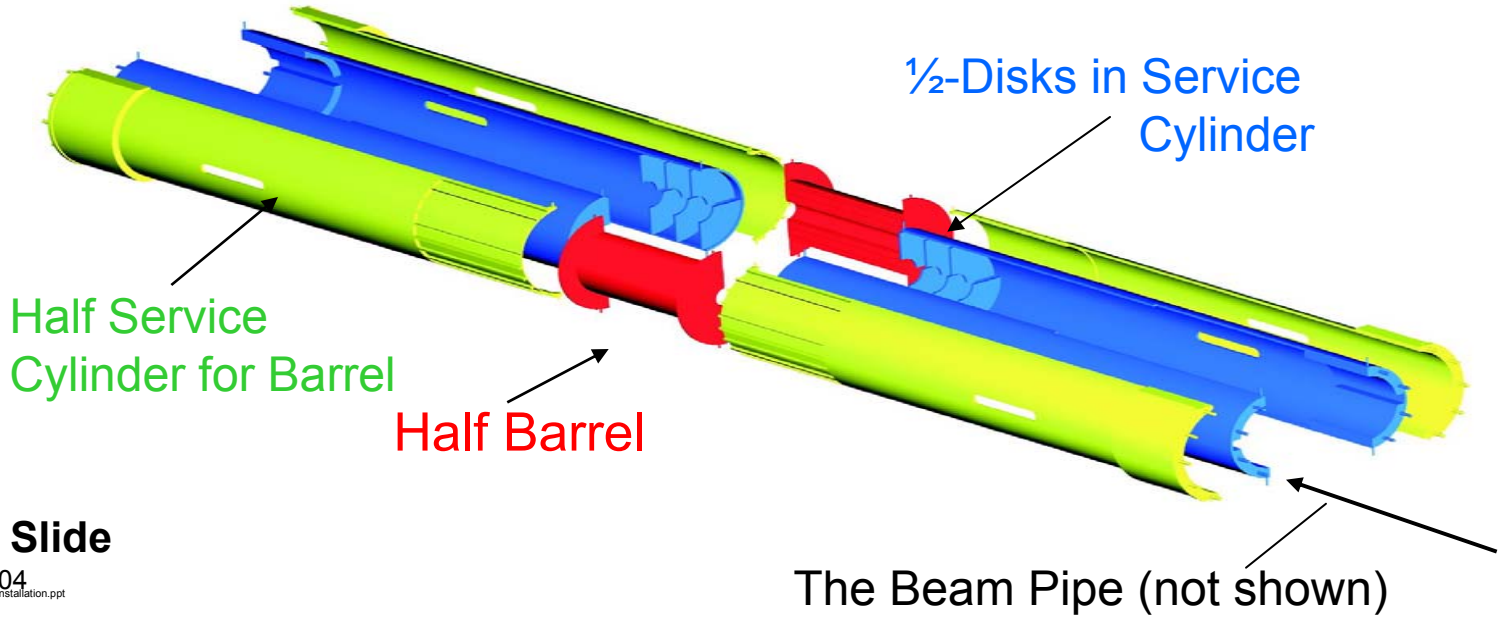


**PSI Slide**

# Mock Up Installation

At an EDR for the CMS Beam Pipe (CERN 4/24/02) the CMS Beam Pipe was approved!

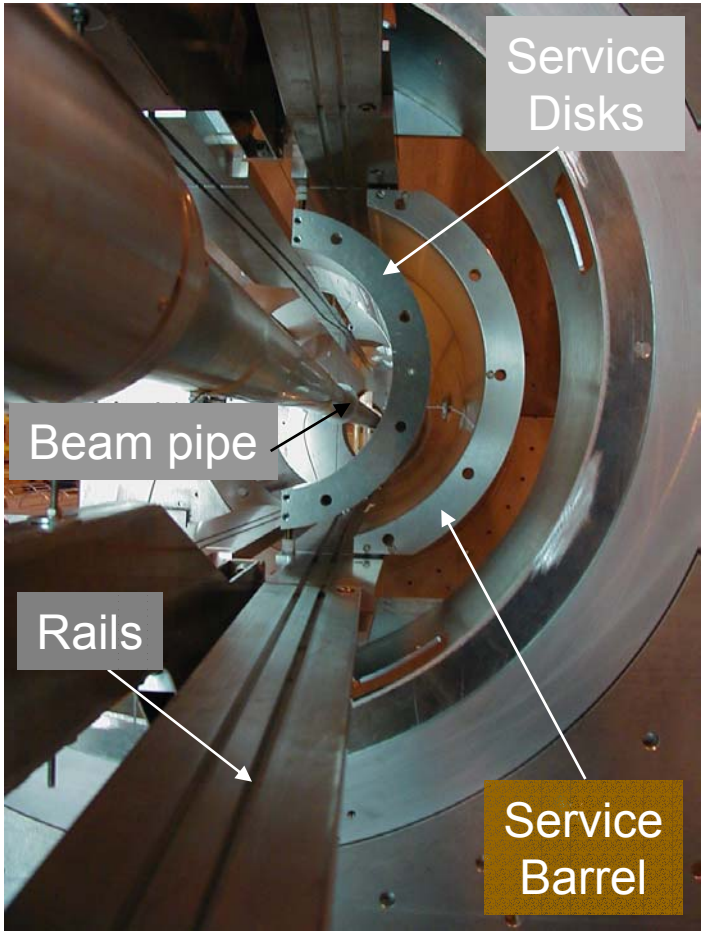


We can now proceed with design/construction of the Disk's Service Cyl.

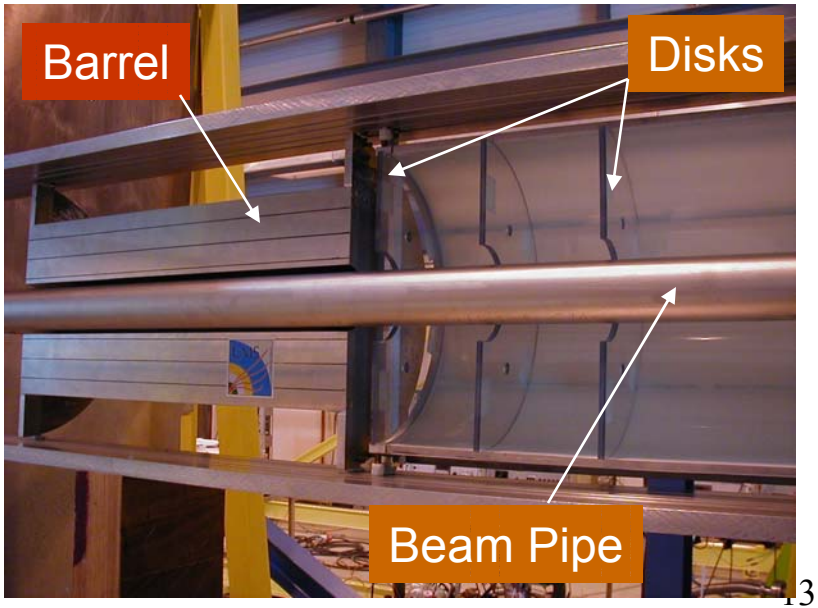

# US CMS Pixel Authors. Apr. 04

**UC Davis:** R. Lander, D. Pellett, G. Grim

**Fnal:** M. Atac, M. Atac, Y. Joshi, B. Baldin, I. Churin, S. Kwan, M.Matulik, A. Nomerotski, S. Los, V. Polubotko, Erik Ramberg, C. Selcuk, C. Gingu, W. Wester, J.C.Yun

**JHU:** B. Barnett, C.Y. Chien, K. Dongwook, M. Swartz, A. Peysner, X. Xiaobo

**Kansas S.:** T. Bolton, R. Sidwell, von Toerne, W. Kahl

**LTechU:** N. Parashar, S. Malik

**Mississippi:** L. Cremaldi, B. Quinn, D. Sanders

**NU:** B. Gobbi, M. Kubantsev, E. Spencer, R.N.Tilden

**Purdue:** D. Bortoletto, G. Bolla, A. Garfinkel, K. Giolo, D. Miller, J. Mayamoto, A. Roy, I. Shipsey, S. Son, K. Arndt

**Rutgers:** J. Conway, S. Schnetzer, R. Stone, S. Worm, E. Bartz, E. Doroshenko, L. Perera, S. Sherman, Y. Streltsov