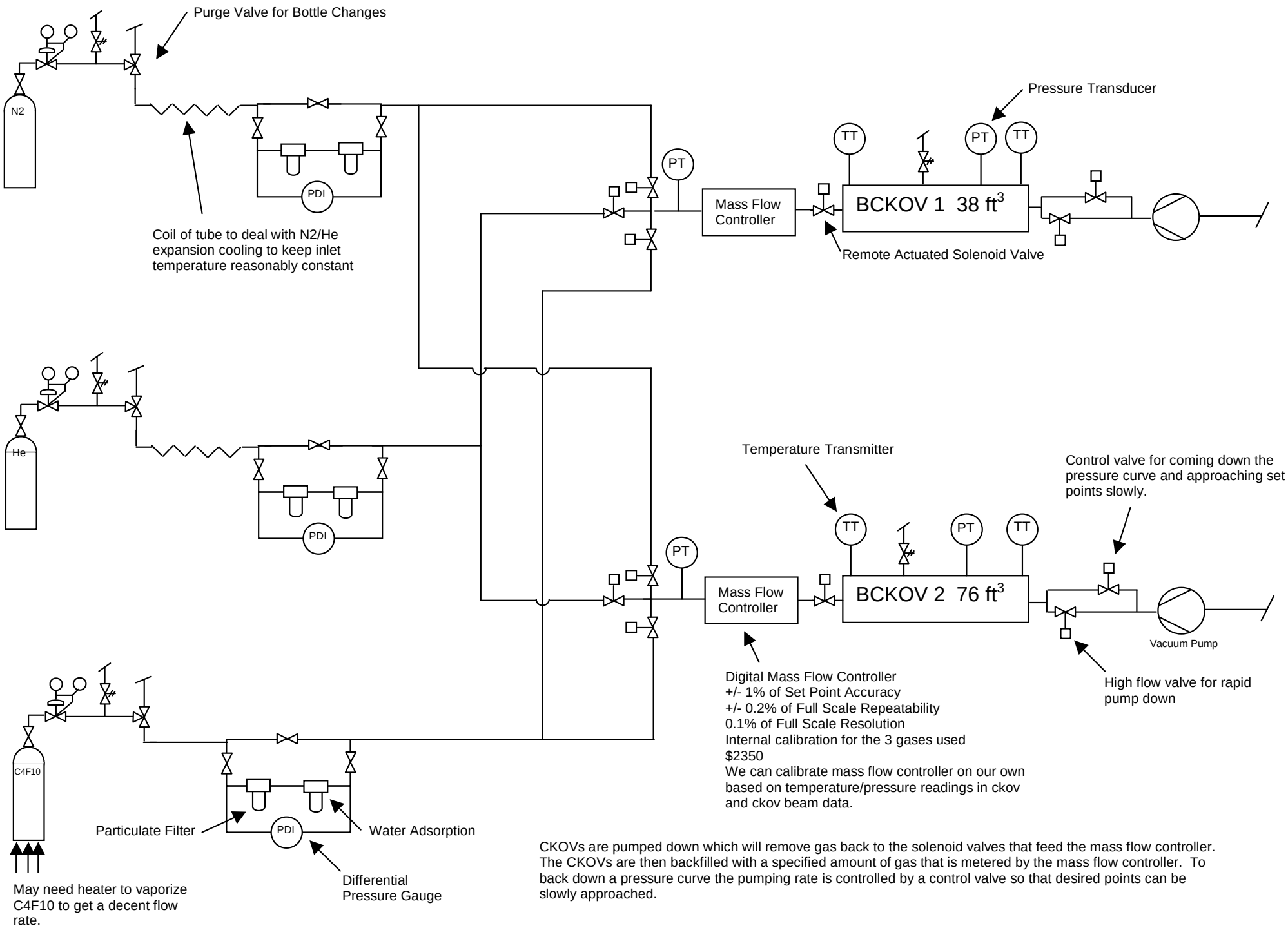

CKOVs are pumped down which will remove gas back to the solenoid valves that feed the mass flow controller. The CKOVs are then backfilled with a specified amount of gas that is metered by the mass flow controller. To back down a pressure curve the pumping rate is controlled by a control valve so that desired points can be slowly approached.

38 ft^3 CKOV

chamber pressure psia	standard ft^3 required to reach pressure	time to reach pressure from vacuum with 50 SLM mass flow controller minutes			time to reach pressure from vacuum with 100 SLM mass flow controller minutes			time to reach pressure from vacuum with 200 SLM mass flow controller minutes		
		N2	He	C4F10	N2	He	C4F10	N2	He	C4F10
1	2.584	1.46	1.01	14.60	0.73	0.50	7.32	0.37	0.25	3.66
2	5.169	2.92	2.01	29.20	1.46	1.01	14.64	0.73	0.50	7.32
3	7.754	4.38	3.02	43.81	2.20	1.51	21.97	1.10	0.76	10.98
4	10.34	5.84	4.02	58.42	2.93	2.02	29.29	1.46	1.01	14.65
5	12.92	7.30	5.03	72.99	3.66	2.52	36.60	1.83	1.26	18.30
6	15.51	8.76	6.04	87.63	4.39	3.03	43.94	2.20	1.51	21.97
7	18.09	10.22	7.04	102.20	5.12	3.53	51.25	2.56	1.77	25.62
8	20.68	11.68	8.05	116.84	5.86	4.04	58.58	2.93	2.02	29.29
9	23.26	13.14	9.05	131.41	6.59	4.54	65.89	3.29	2.27	32.95
10	25.85	14.60	10.06	146.05	7.32	5.05	73.23	3.66	2.52	36.61
11	28.43	16.06	11.06	160.62	8.05	5.55	80.54	4.03	2.78	40.27
12	31.02	17.53	12.07	175.25	8.79	6.06	87.88	4.39	3.03	43.94
13	33.6	18.98	13.07	189.83	9.52	6.56	95.18	4.76	3.28	47.59
14	36.19	20.45	14.08	204.46	10.25	7.07	102.52	5.13	3.53	51.26
14.7	38	21.47	14.79	214.69	10.76	7.42	107.65	5.38	3.71	53.82

76 ft^3 CKOV

chamber pressure psia	standard ft^3 required to reach pressure	time to reach pressure from vacuum with 50 SLM mass flow controller minutes			time to reach pressure from vacuum with 100 SLM mass flow controller minutes			time to reach pressure from vacuum with 200 SLM mass flow controller minutes		
		N2	He	C4F10	N2	He	C4F10	N2	He	C4F10
1	5.169	2.92	2.01	29.20	1.46	1.01	14.64	0.73	0.50	7.32
2	10.34	5.84	4.02	58.42	2.93	2.02	29.29	1.46	1.01	14.65
3	15.51	8.76	6.04	87.63	4.39	3.03	43.94	2.20	1.51	21.97
4	20.68	11.68	8.05	116.84	5.86	4.04	58.58	2.93	2.02	29.29
5	25.85	14.60	10.06	146.05	7.32	5.05	73.23	3.66	2.52	36.61
6	31.02	17.53	12.07	175.25	8.79	6.06	87.88	4.39	3.03	43.94
7	36.19	20.45	14.08	204.46	10.25	7.07	102.52	5.13	3.53	51.26
8	41.36	23.37	16.09	233.67	11.72	8.08	117.17	5.86	4.04	58.58
9	46.53	26.29	18.11	262.88	13.18	9.09	131.81	6.59	4.54	65.91
10	51.7	29.21	20.12	292.09	14.65	10.10	146.46	7.32	5.05	73.23
11	56.87	32.13	22.13	321.30	16.11	11.11	161.10	8.06	5.55	80.55
12	62.04	35.05	24.14	350.51	17.58	12.12	175.75	8.79	6.06	87.88
13	67.21	37.97	26.15	379.72	19.04	13.13	190.40	9.52	6.56	95.20
14	72.38	40.89	28.16	408.93	20.50	14.14	205.04	10.25	7.07	102.52
14.7	76	42.94	29.57	429.38	21.53	14.84	215.30	10.76	7.42	107.65

Notes:

C_4F_{10} fills at about one-tenth of the rate of N_2 due to its high molecular weight.

SLM = standard liters per minute