REV	DESCRIPTION	DRAWN	DATE
		APPROVED	DATE

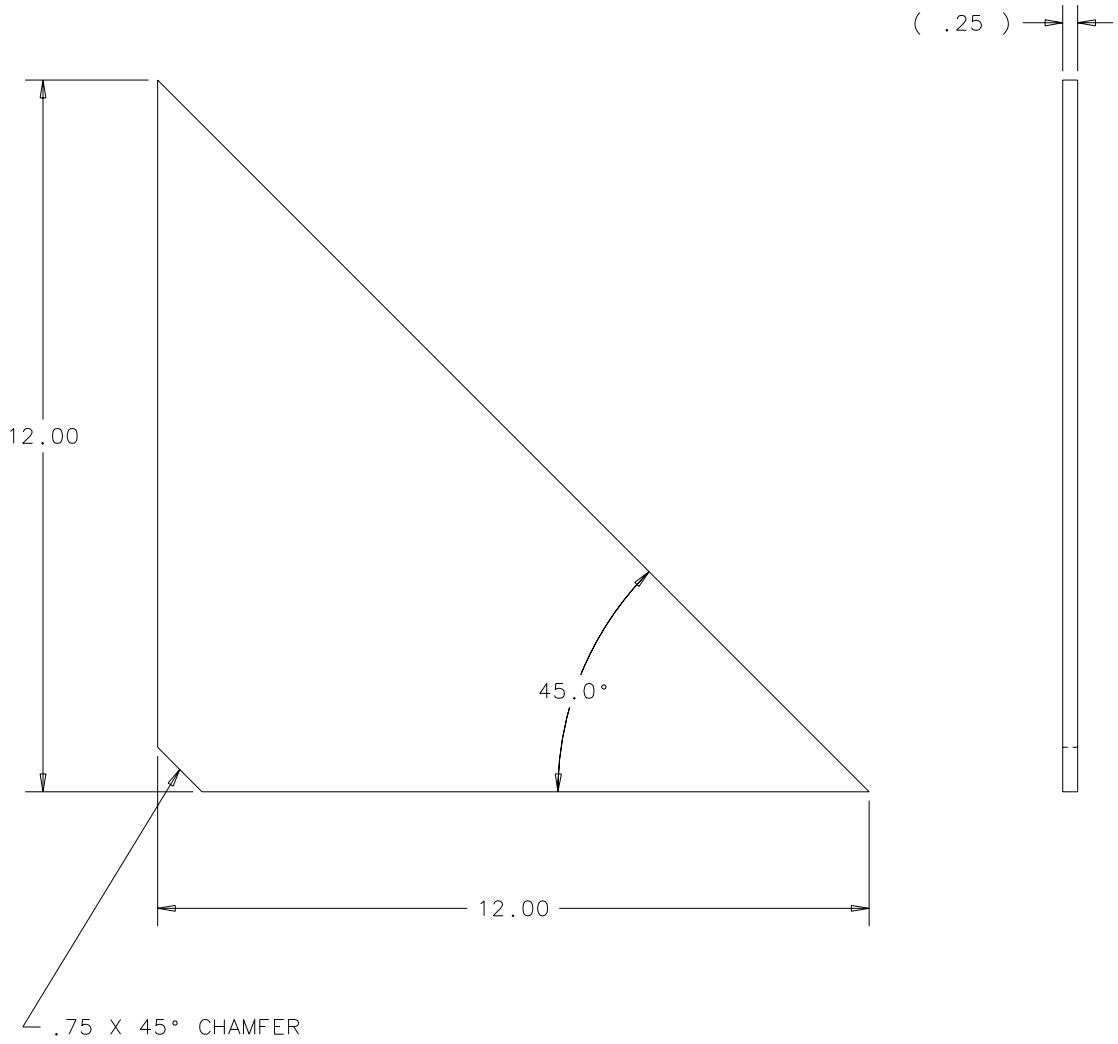

ITEM	PART NO.	DESCRIPTION OR SIZE	QTY.

PARTS LIST

UNLESS OTHERWISE SPECIFIED					
.XX	.XXX	ANGLES	ORIGINATOR	I.FANG	30-AUG-2002
± .03	± .015	± ---	DRAWN	G.SMITH	30-AUG-2002
			CHECKED	C.NILA	17-SEP-2002
			APPROVED	I.FANG	17-SEP-2002

1. BREAK ALL SHARP EDGES .015 MAX.
2. DO NOT SCALE DRAWING.
3. DIMENSIONS BASED UPON ANSI Y14.5M-1982
4. ALL DIMENSIONS ARE INCHES
5. MAX. ALL MACH. SURFACES 125 √

USED ON: ME-421052

MATERIAL: 304 STAINLESS STEEL 1/4 X 12.00 X 12.00

FERMI NATIONAL ACCELERATOR LABORATORY
UNITED STATES DEPARTMENT OF ENERGY

PPD/MECHANICAL DEPARTMENT
E907 TPC MOVEABLE CART
GUSSET PLATE

SCALE	DRAWING NUMBER	SHEET	REV
1 : 2	3907.590-MB-421054	1 OF 1	

CREATED WITH : Ideas8m4 | GROUP: PPD/MECHANICAL DEPARTMENT