REV	DESCRIPTION	DRAWN	DATE
		APPROVED	DATE

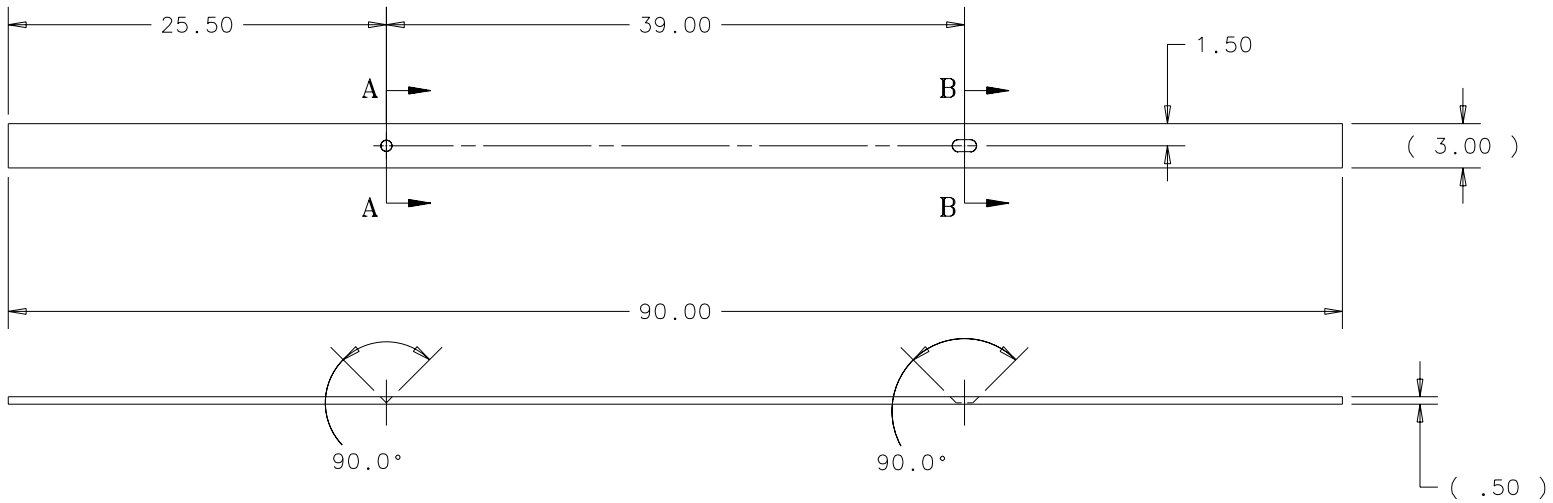

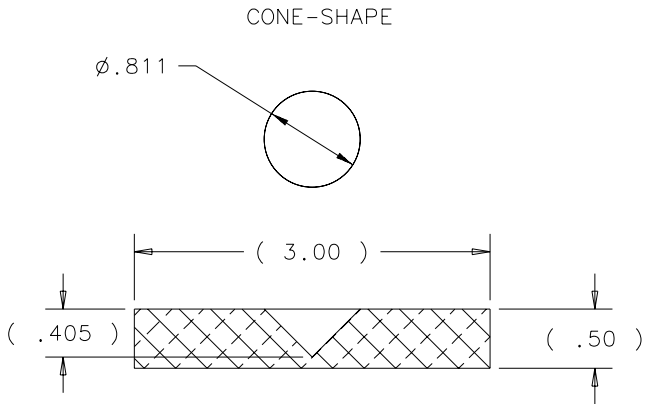

SECTION A-A
SCALE 1;1

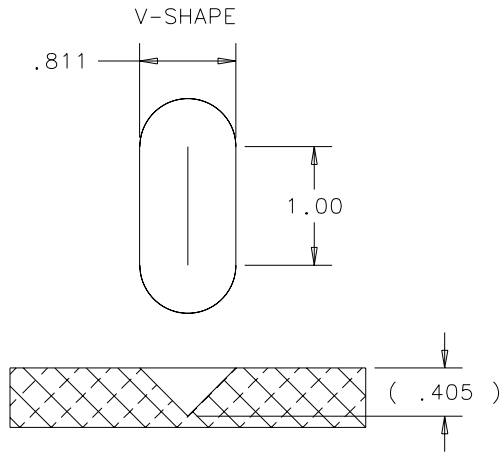

SECTION B-B
SCALE 1;1

ITEM	PART NO.	DESCRIPTION OR SIZE	QTY.

PARTS LIST

UNLESS OTHERWISE SPECIFIED			ORIGINATOR	I.FANG	30-AUG-2002
.XX	.XXX	ANGLES	DRAWN	G.SMITH	30-AUG-2002
± .03	± .015	± ---	CHECKED	C.NILA	17-SEP-2002
			APPROVED	I.FANG	17-SEP-2002

1. BREAK ALL SHARP EDGES .015 MAX.
2. DO NOT SCALE DRAWING.
3. DIMENSIONS BASED UPON ANSI Y14.5M-1982
4. ALL DIMENSIONS ARE INCHES
5. MAX. ALL MACH. SURFACES 125 √

USED ON: ME-421052

MATERIAL: 304 STAINLESS STEEL 1/2 X 3 X 90.00 LG.

FERMI NATIONAL ACCELERATOR LABORATORY
UNITED STATES DEPARTMENT OF ENERGY

PPD/MECHANICAL DEPARTMENT
E907 TPC/HYDROGEN TARGET
U.S. LOCATING PIN HOLE PLATE

SCALE	DRAWING NUMBER	SHEET	REV
1:8 & NOTED	3907.590-MB-421056	1 OF 1	

CREATED WITH : Ideas8m4 | GROUP: PPD/MECHANICAL DEPARTMENT